TORONTO Ø 125 см

Инструкция по монтажу

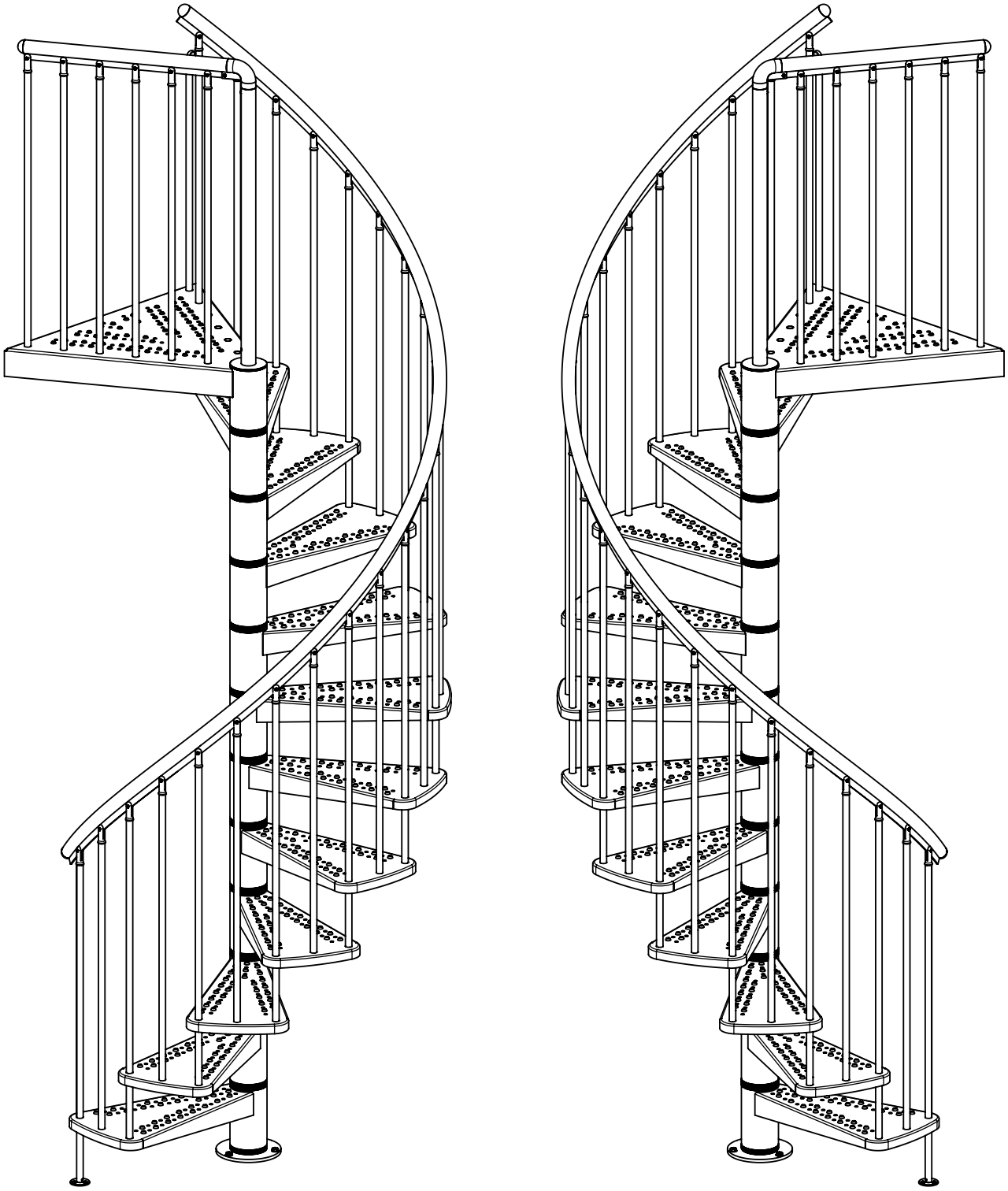

R1-99771 / 17-01-2014 / Ред. 01-11-2019

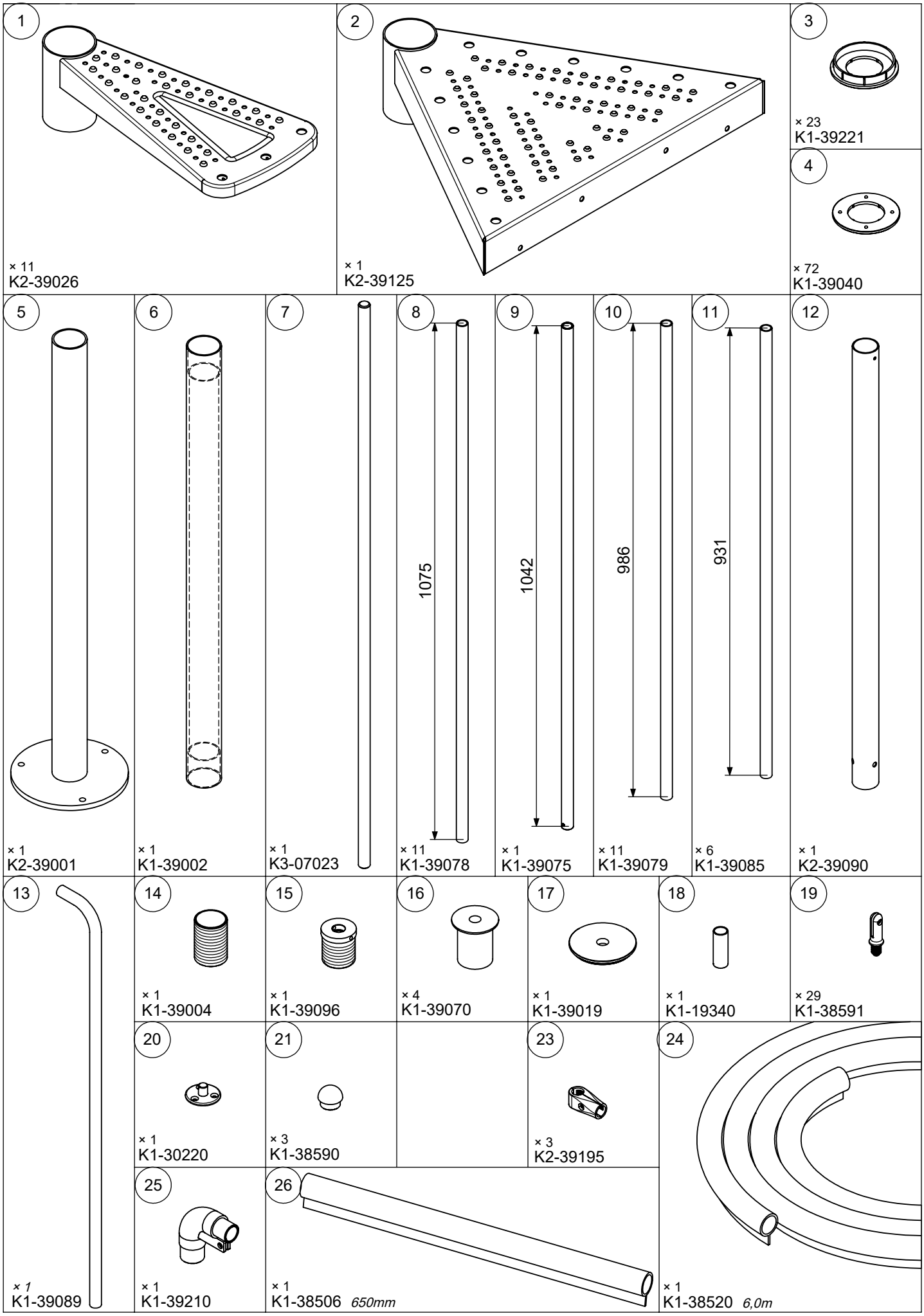
1
× 11
K2-39026
2
× 1
K2-39125
3
× 23
K1-39221
4
× 72
K1-39040
5
× 1
K2-39001
6
× 1
K1-39002
7
× 1
K3-07023
8
1075
× 11
K1-39078
9
1042
× 1
K1-39075
10
986
× 11
K1-39079
11
931
× 6
K1-39085
12
× 1
K2-39090
13
× 1
K1-39089
14
× 1
K1-39004
15
× 1
K1-39096
16
× 4
K1-39070
17
× 1
K1-39019
18
× 1
K1-19340
19
× 29
K1-38591
20
× 1
K1-30220
21
× 3
K1-38590
23
× 3
K2-39195
24
× 1
K1-38520 6,0m
25
× 1
K1-39210
26
× 1
K1-38506 650mm

27 × 1 K1-39214	28 × 2 K2-39010	33 × 4 K1-39030				
50 × 7 K3-06070 *Ø10 x 60*	51 × 7 K3-04040 *Ø10*	52 × 7 K3-08001 *Ø12 x 60*	53 × 2 K3-05021 *M8 x 10*	54 × 2 K3-03054 *M20*	55 × 2 K3-04021 *Ø20*	56 × 85 K3-05055 *M6 x 5*
57 × 9 K3-08002 *Ø8 x 40*	58 × 9 K3-06007 *Ø6 x 35*	59 × 30 K3-03050 *M5*	60 × 30 K3-01201 *M5 x 14*	69 × 1 R1-63272 *Ø6 x 25*	70 × 1 K3-90001	

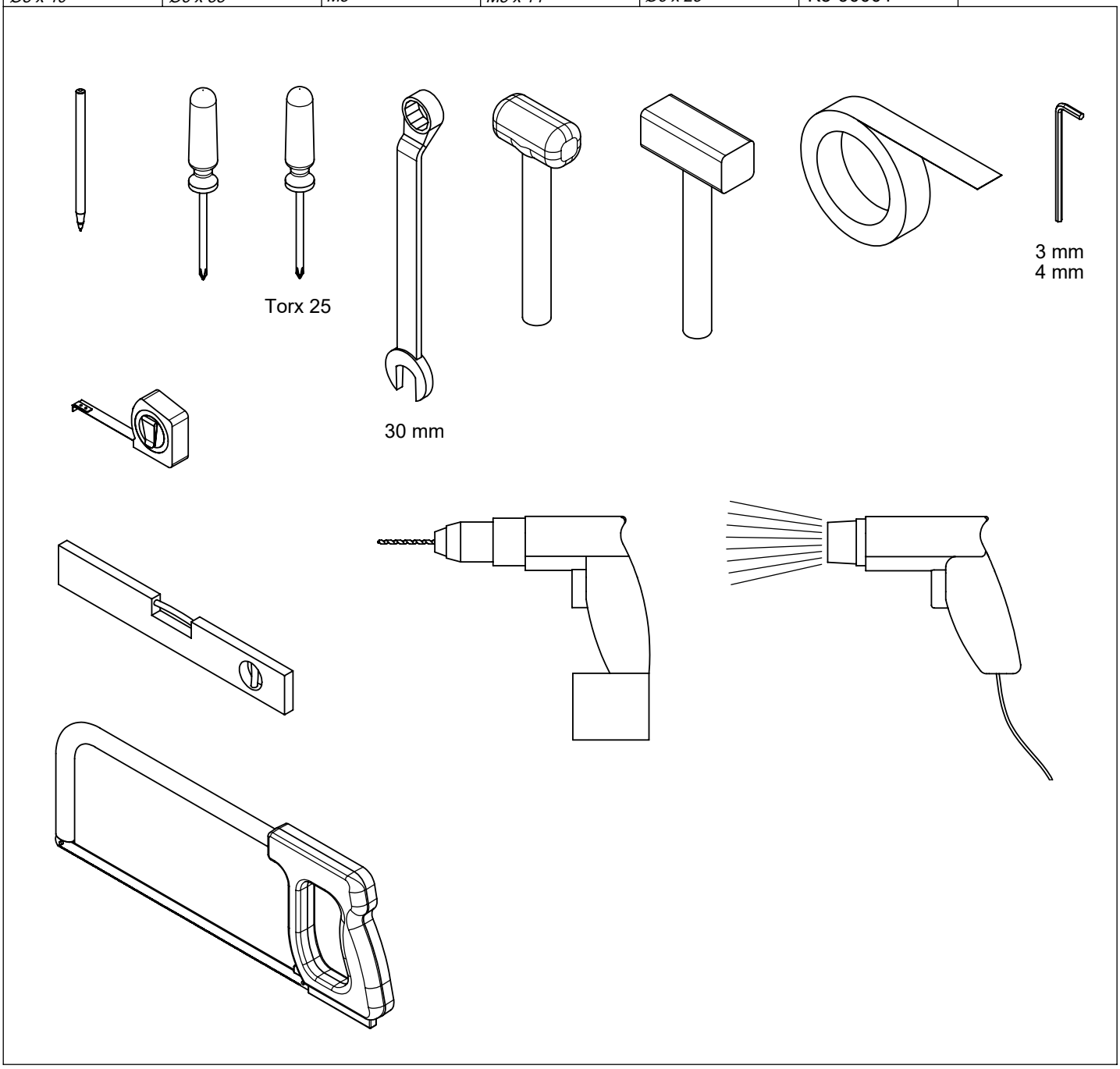

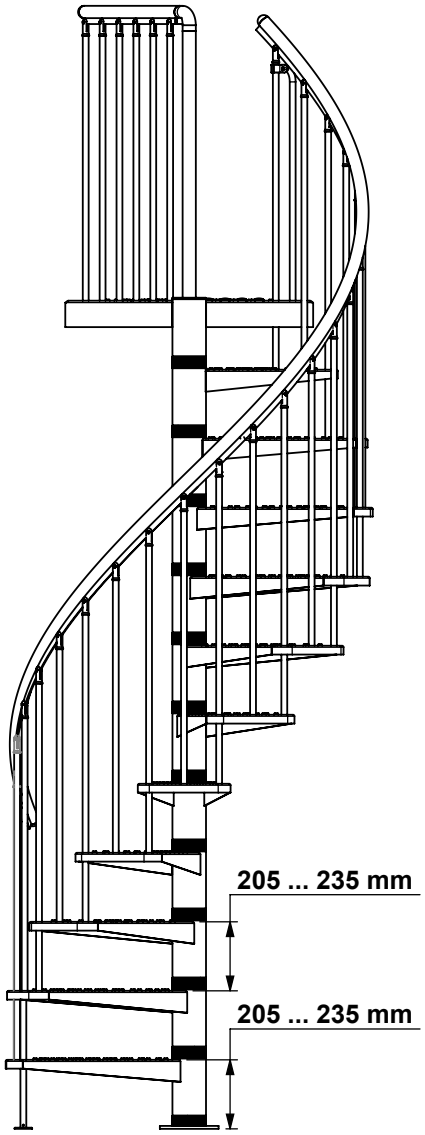

205 mm

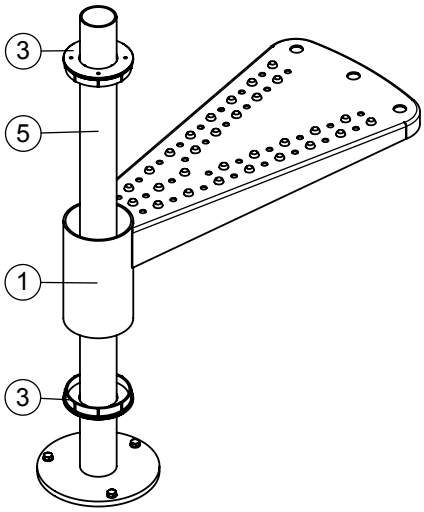

210 mm

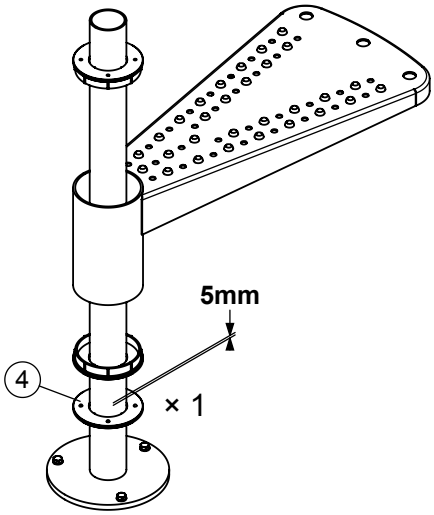

215 mm

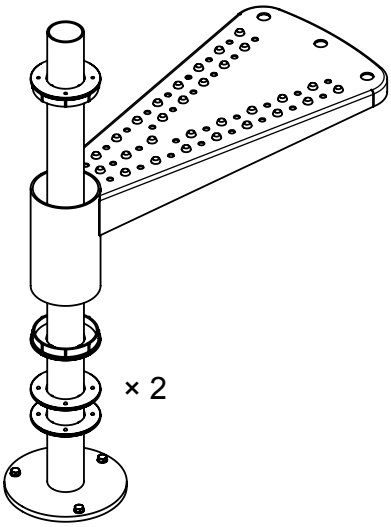

220 mm

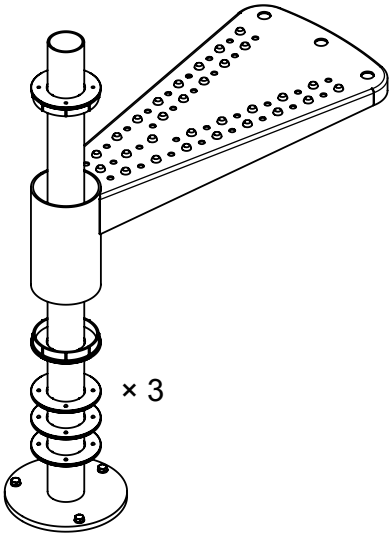

225 mm

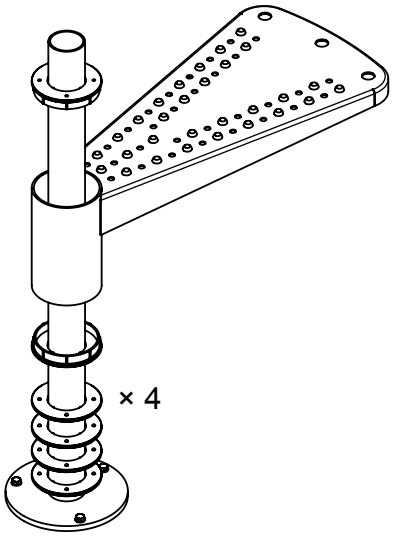

230 mm

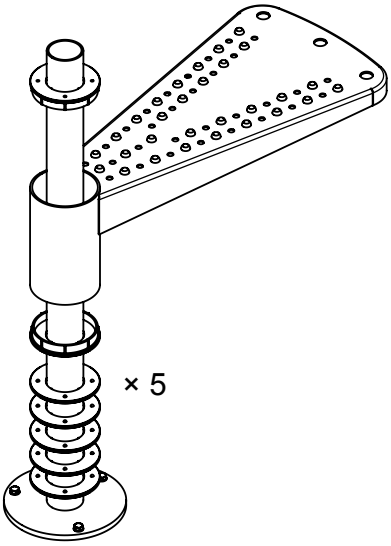

235 mm

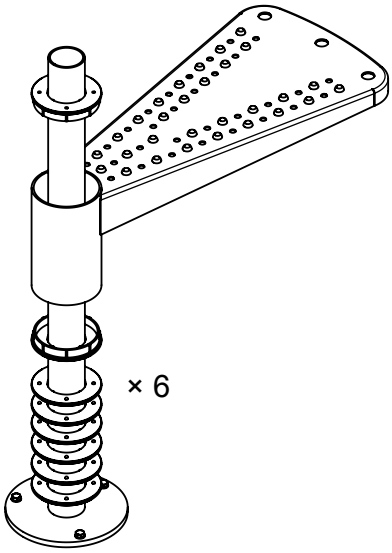

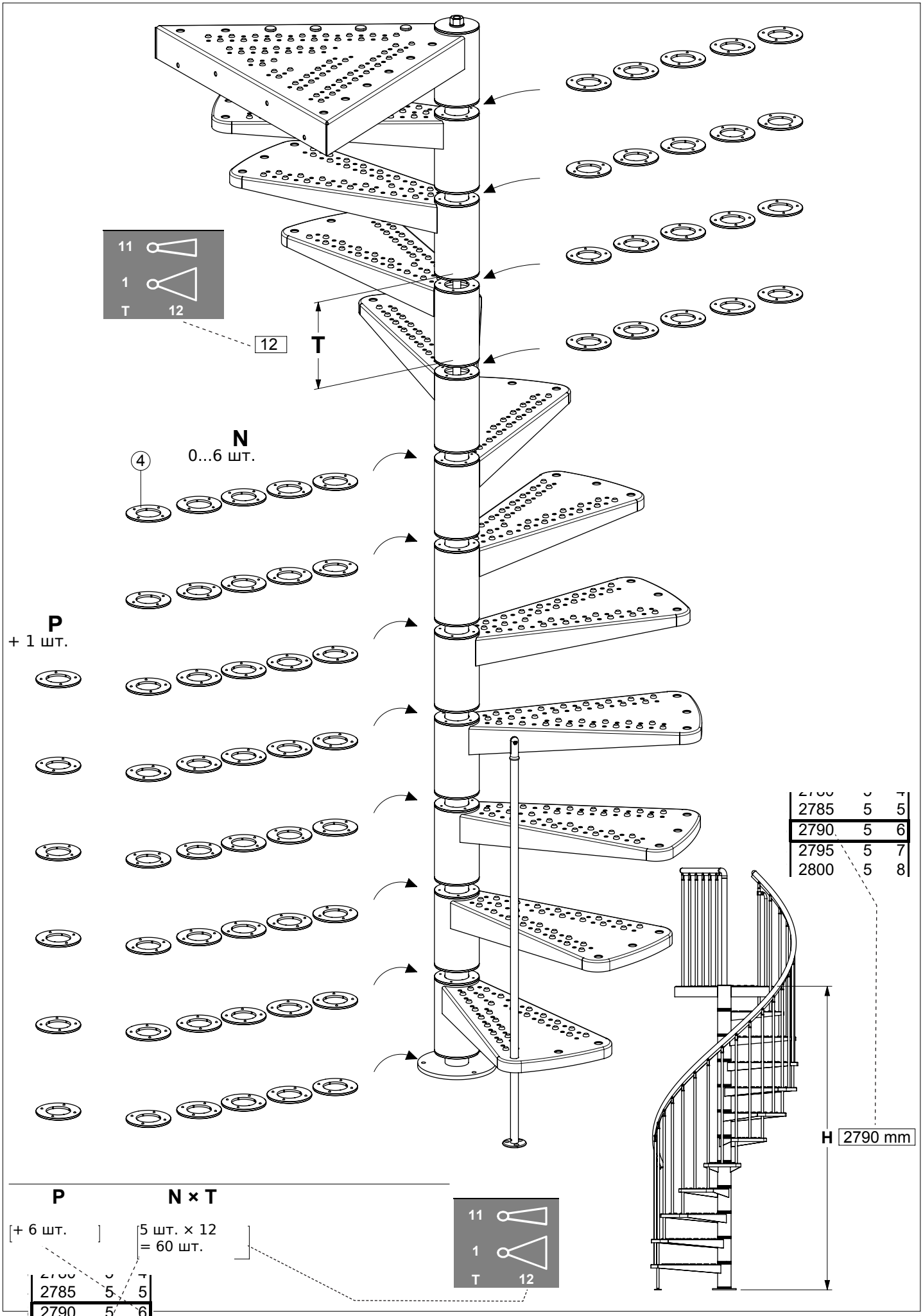

2785	5	5
2790	5	6
2795	5	7
2800	5	8

2785	5	5
2790	5	6
2795	5	7
2800	5	8

11						12						13						14						15						16					
1						1												1						1						1					
T	12					T	13						13					T	14						15					T	16				
H	N	P	H	N	P	H	N	P	H	N	P	H	N	P	H	N	P	H	N	P	H	N	P	H	N	P	H	N	P	H	N	P	H	N	P
	st	st		st	st		st	st		st	st		st	st		st	st		st	st		st	st		st	st		st	st		st	st		st	st
mm	pcs	pcs	mm	pcs	pcs	mm	pcs	pcs	mm	pcs	pcs	mm	pcs	pcs	mm	pcs	pcs	mm	pcs	pcs	mm	pcs	pcs	mm	pcs	pcs	mm	pcs	pcs	mm	pcs	pcs	mm	pcs	pcs
2460	0	0	2645	3	1	2665	0	0	2865	3	1	2870	0	0	3085	3	1	3075	0	0	3305	3	1	3280	0	0	3525	3	1	3485	0	0	3745	3	1
2465	0	1	2650	3	2	2670	0	1	2870	3	2	2875	0	1	3090	3	2	3080	0	1	3310	3	2	3285	0	1	3530	3	2	3490	0	1	3750	3	2
2470	0	2	2655	3	3	2675	0	2	2875	3	3	2880	0	2	3095	3	3	3085	0	2	3315	3	3	3290	0	2	3535	3	3	3495	0	2	3755	3	3
2475	0	3	2660	3	4	2680	0	3	2880	3	4	2885	0	3	3100	3	4	3090	0	3	3320	3	4	3295	0	3	3540	3	4	3500	0	3	3760	3	4
2480	0	4	2665	3	5	2685	0	4	2885	3	5	2890	0	4	3105	3	5	3095	0	4	3325	3	5	3300	0	4	3545	3	5	3505	0	4	3765	3	5
2485	0	5	2670	3	6	2690	0	5	2890	3	6	2895	0	5	3110	3	6	3100	0	5	3330	3	6	3305	0	5	3550	3	6	3510	0	5	3770	3	6
2490	0	6	2675	3	7	2695	0	6	2895	3	7	2900	0	6	3115	3	7	3105	0	6	3335	3	7	3310	0	6	3555	3	7	3515	0	6	3775	3	7
2495	0	7	2680	3	8	2700	0	7	2900	3	8	2905	0	7	3120	3	8	3110	0	7	3340	3	8	3315	0	7	3560	3	8	3520	0	7	3780	3	8
2500	0	8	2685	3	9	2705	0	8	2905	3	9	2910	0	8	3125	3	9	3115	0	8	3345	3	9	3320	0	8	3565	3	9	3525	0	8	3785	3	9
2505	0	9	2690	3	10	2710	0	9	2910	3	10	2915	0	9	3130	3	10	3120	0	9	3350	3	10	3325	0	9	3570	3	10	3530	0	9	3790	3	10
2510	0	10	2695	3	11	2715	0	10	2915	3	11	2920	0	10	3135	3	11	3125	0	10	3355	3	11	3330	0	10	3575	3	11	3535	0	10	3795	3	11
2515	0	11	2700	4	0	2720	0	11	2920	3	12	2925	0	11	3140	3	12	3130	0	11	3360	3	12	3335	0	11	3580	3	12	3540	0	11	3800	3	12
2520	1	0	2705	4	1	2725	0	12	2925	4	0	2930	0	12	3145	3	13	3135	0	12	3365	3	13	3340	0	12	3585	3	13	3545	0	12	3805	3	13
2525	1	1	2710	4	2	2730	1	0	2930	4	1	2935	0	13	3150	4	0	3140	0	13	3370	3	14	3345	0	13	3590	3	14	3550	0	13	3810	3	14
2530	1	2	2715	4	3	2735	1	1	2935	4	2	2940	1	0	3155	4	1	3145	0	14	3375	4	0	3350	0	14	3595	3	15	3555	0	14	3815	3	15
2535	1	3	2720	4	4	2740	1	2	2940	4	3	2945	1	1	3160	4	2	3150	1	0	3380	4	1	3355	0	15	3600	4	0	3560	0	15	3820	3	16
2540	1	4	2725	4	5	2745	1	3	2945	4	4	2950	1	2	3165	4	3	3155	1	1	3385	4	2	3360	1	0	3605	4	1	3565	0	16	3825	4	0
2545	1	5	2730	4	6	2750	1	4	2950	4	5	2955	1	3	3170	4	4	3160	1	2	3390	4	3	3365	1	1	3610	4	2	3570	1	0	3830	4	1
2550	1	6	2735	4	7	2755	1	5	2955	4	6	2960	1	4	3175	4	5	3165	1	3	3395	4	4	3370	1	2	3615	4	3	3575	1	1	3835	4	2
2555	1	7	2740	4	8	2760	1	6	2960	4	7	2965	1	5	3180	4	6	3170	1	4	3400	4	5	3375	1	3	3620	4	4	3580	1	2	3840	4	3
2560	1	8	2745	4	9	2765	1	7	2965	4	8	2970	1	6	3185	4	7	3175	1	5	3405	4	6	3380	1	4	3625	4	5	3585	1	3	3845	4	4
2565	1	9	2750	4	10	2770	1	8	2970	4	9	2975	1	7	3190	4	8	3180	1	6	3410	4	7	3385	1	5	3630	4	6	3590	1	4	3850	4	5
2570	1	10	2755	4	11	2775	1	9	2975	4	10	2980	1	8	3195	4	9	3185	1	7	3415	4	8	3390	1	6	3635	4	7	3595	1	5	3855	4	6
2575	1	11	2760	5	0	2780	1	10	2980	4	11	2985	1	9	3200	4	10	3190	1	8	3420	4	9	3395	1	7	3640	4	8	3600	1	6	3860	4	7
2580	2	0	2765	5	1	2785	1	11	2985	4	12	2990	1	10	3205	4	11	3195	1	9	3425	4	10	3400	1	8	3645	4	9	3605	1	7	3865	4	8
2585	2	1	2770	5	2	2790	1	12	2990	5	0	2995	1	11	3210	4	12	3200	1	10	3430	4	11	3405	1	9	3650	4	10	3610	1	8	3870	4	9
2590	2	2	2775	5	3	2795	2	0	2995	5	1	3000	1	12	3215	4	13	3205	1	11	3435	4	12	3410	1	10	3655	4	11	3615	1	9	3875	4	10
2595	2	3	2780	5	4	2800	2	1	3000	5	2	3005	1	13	3220	5	0	3210	1	12	3440	4	13	3415	1	11	3660	4	12	3620	1	10	3880	4	11
2600	2	4	2785	5	5	2805	2	2	3005	5	3	3010	2	0	3225	5	1	3215	1	13	3445	4	14	3420	1	12	3665	4	13	3625	1	11	3885	4	12
2605	2	5	2790	5	6	2810	2	3	3010	5	4	3015	2	1	3230	5	2	3220	1	14	3450	5	0	3425	1	13	3670	4	14	3630	1	12	3890	4	13
2610	2	6	2795	5	7	2815	2	4	3015	5	5	3020	2	2	3235	5	3	3225	2	0	3455	5	1	3430	1	14	3675	4	15	3635	1	13	3895	4	14
2615	2	7	2800	5	8	2820	2	5	3020	5	6	3025	2	3	3240	5	4	3230	2	1	3460	5	2	3435	1	15	3680	5	0	3640	1	14	3900	4	15
2620	2	8	2805	5	9	2825	2	6	3025	5	7	3030	2	4	3245	5	5	3235	2	2	3465	5	3	3440	2	0	3685	5	1	3645	1	15	3905	4	16
2625	2	9	2810	5	10	2830	2	7	3030	5	8	3035	2	5	3250	5	6	3240	2	3	3470	5	4	3445	2	1	3690	5	2	3650	1	16	3910	5	0
2630	2	10	2815	5	11	2835	2	8	3035	5	9	3040	2	6	3255	5	7	3245	2	4	3475	5	5	3450	2	2	3695	5	3	3655	2	0	3915	5	1
2635	2	11	2820	6	0	2840	2	9	3040	5	10	3045	2	7	3260	5	8	3250	2	5	3480	5	6	3455	2	3	3700	5	4	3660	2	1	3920	5	2
2640	3	0				2845	2	10	3045	5	11	3050	2	8	3265	5	9	3255	2	6	3485	5	7	3460	2	4	3705	5	5	3665	2	2	3925	5	3
						2850	2	11	3050	5	12	3055	2	9	3270	5	10	3260	2	7	3490	5	8	3465	2	5	3710	5	6	3670	2	3	3930	5	4
						2855	2	12	3055	6	0	3060	2	10	3275	5	11	3265	2	8	3495	5	9	3470	2	6	3715	5	7	3675	2	4	3935	5	5
						2860	3	0				3065	2	11	3280	5	12	3270	2	9	3500	5	10	3475	2	7	3720	5	8	3680	2	5	3940	5	6
												3070	2	12	3285	5	13	3275	2	10	3505	5	11	3480	2	8	3725	5	9	3685	2	6	3945	5	7
												3075	2	13	3290	6	0	3280	2	11	3510	5	12	3485	2	9	3730	5	10	3690	2	7	3950	5	8
												3080	3	0				3285	2	12	3515	5	13	3490	2	10	3735	5	11	3695	2	8	3955	5	9
																		3290	2	13	3520	5	14	3495	2	11	3740	5	12	3700	2	9	3960	5	10
																		3295	2	14	3525	6	0	3500	2	12	3745	5	13	3705	2	10	3965	5	11
																		3300	3	0				3505	2	13	3750	5	14	3710	2	11	3970	5	12
																								3510	2	14	3755	5	15	3715	2	12	3975	5	13
																								3515	2	15	3760	6	0	3720	2	13	3980	5	14
																								3520	3	0				3725	2	14	3985	5	15
																														3730	2	15	3990	5	16
																														3735	2	16	3995	6	0
																														3740	3	0			

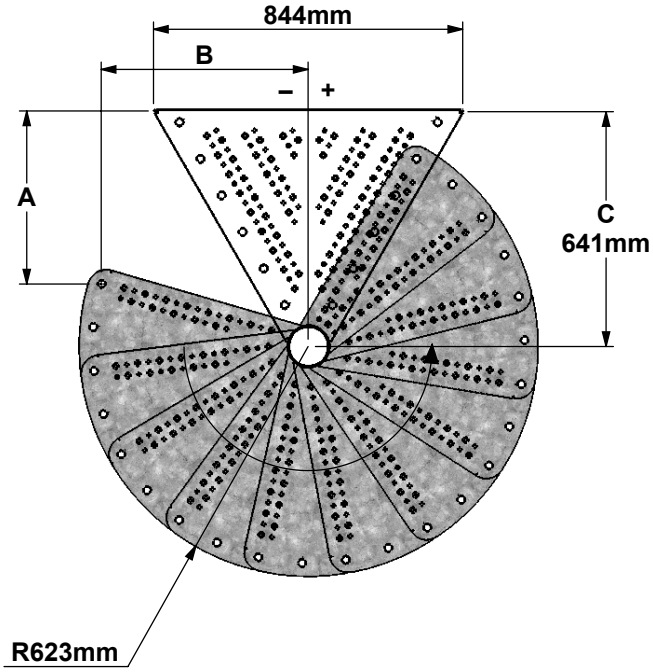

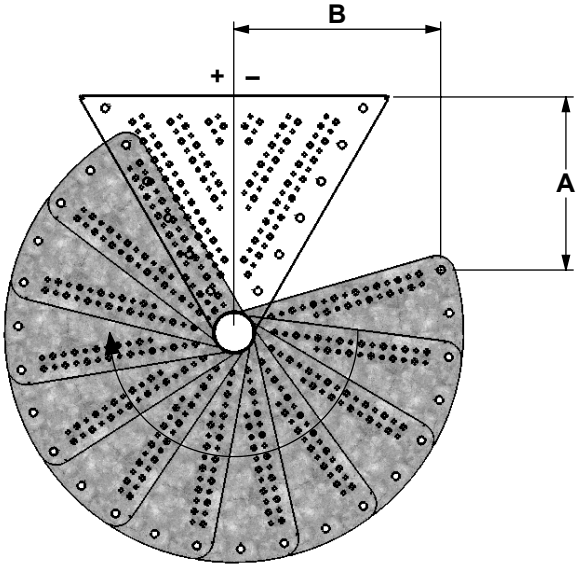

Ø 125 cm		
	A	B
	mm	mm
11	472	-565
12	263	-451
13	115	-263
14	54	-33
15	89	204
16	215	406

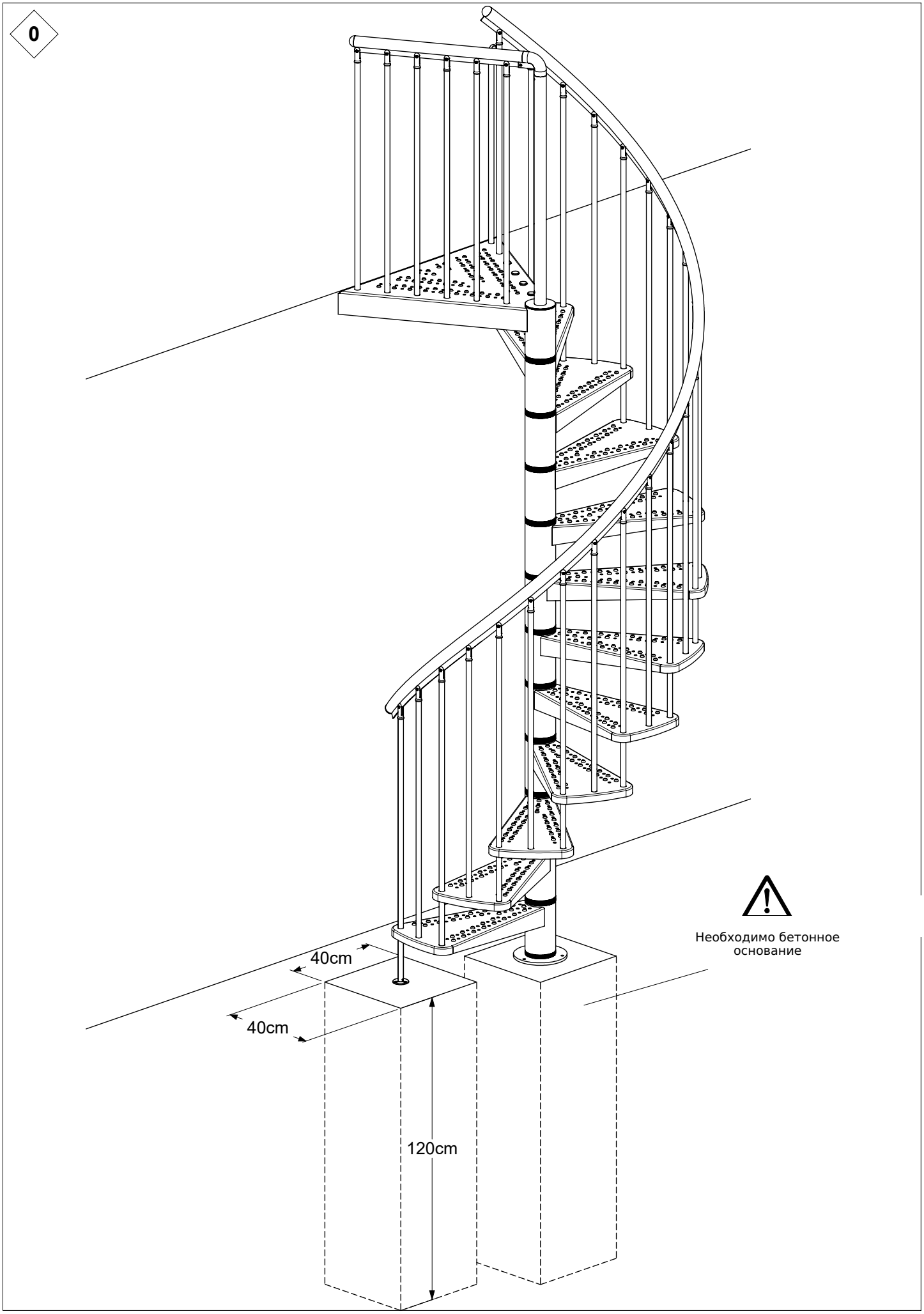
0
Необходимо бетонное основание
40cm
40cm
120cm

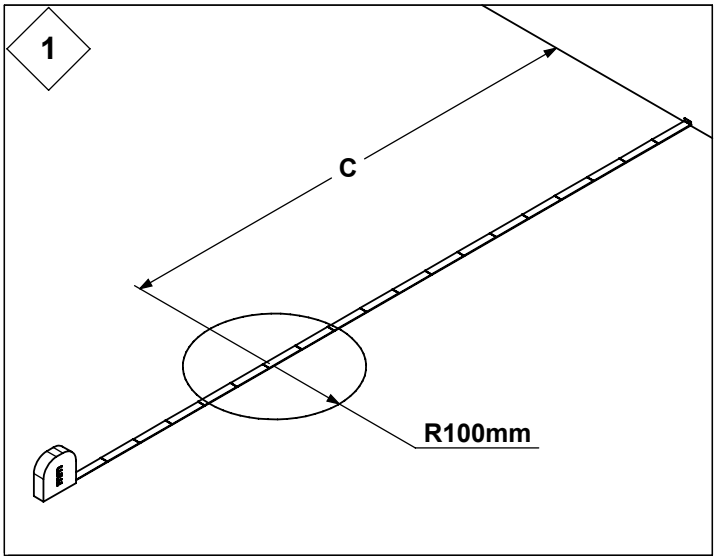
1
C
R100mm

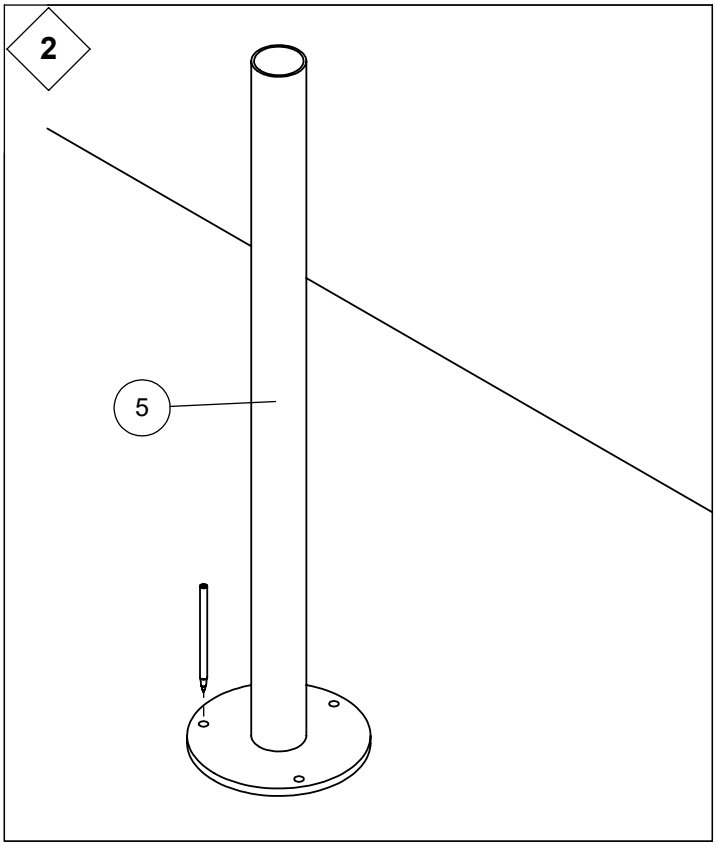
2
5

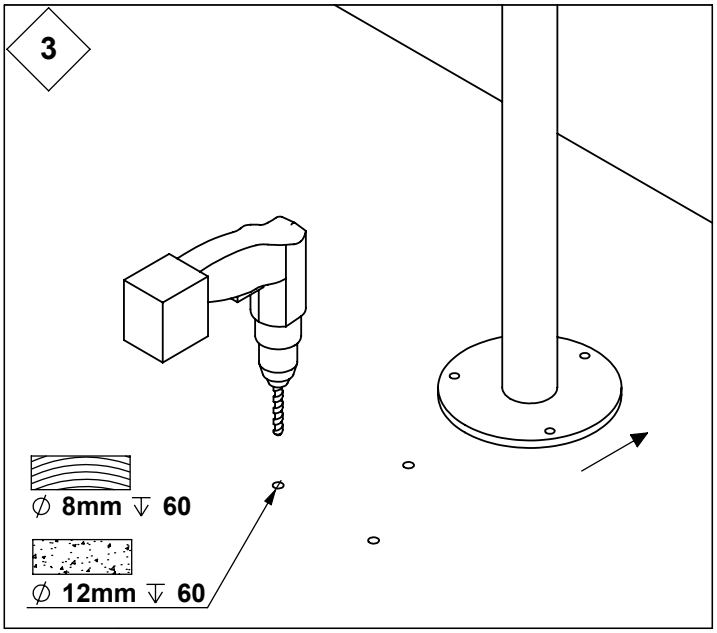
3
∅ 8mm ↓ 60
∅ 12mm ↓ 60

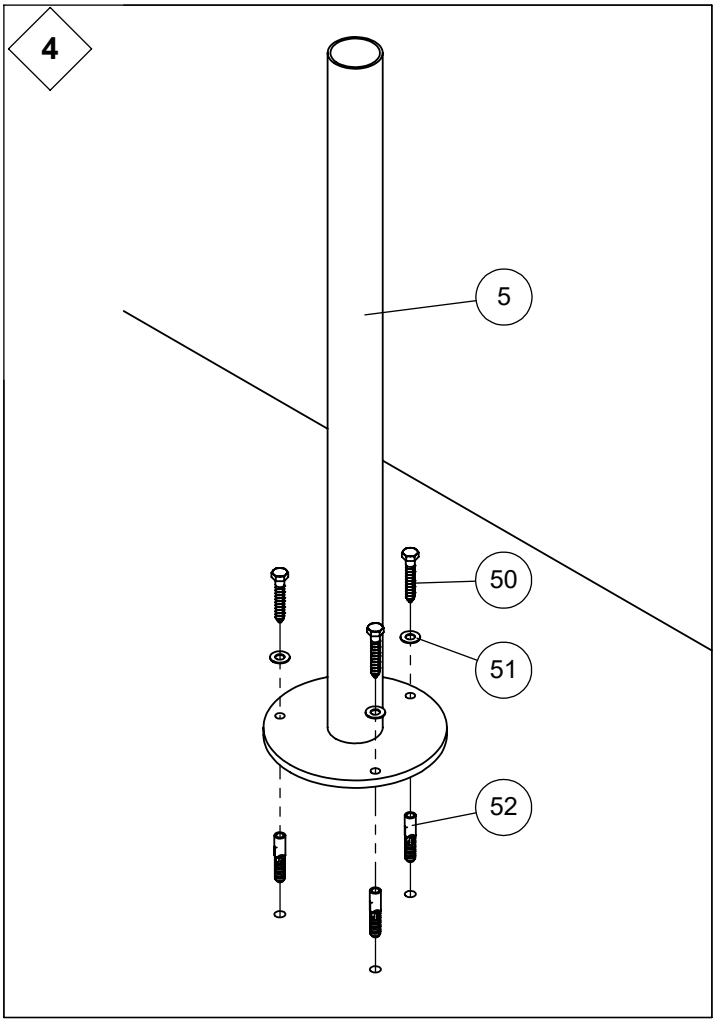
4
5
50
51
52

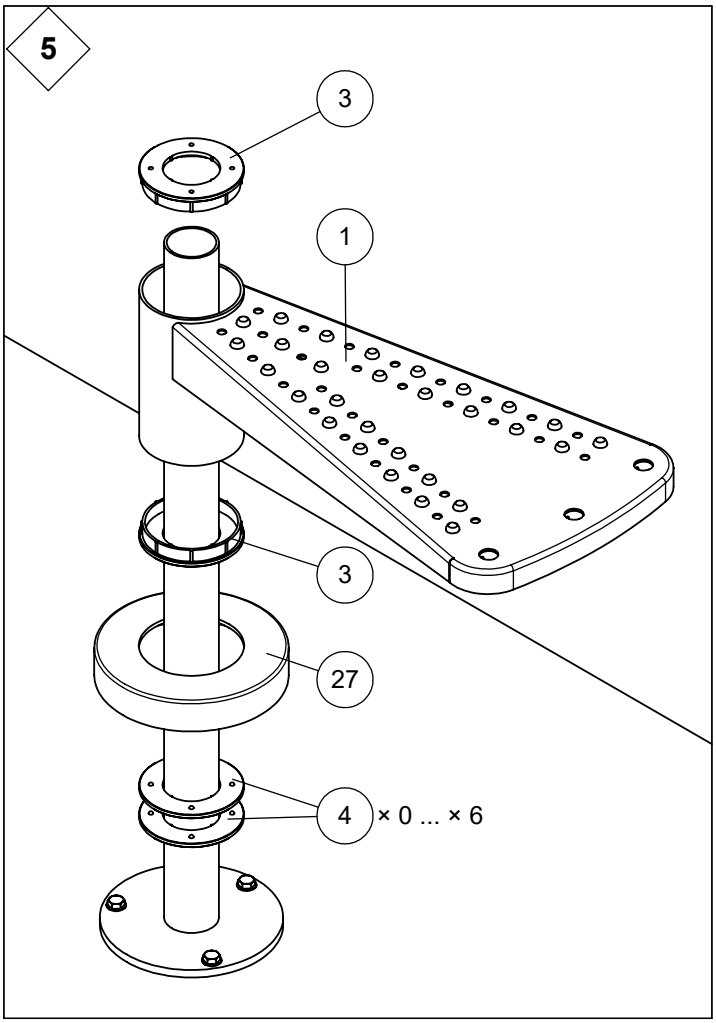
5
3
1
3
27
4 × 0 ... × 6

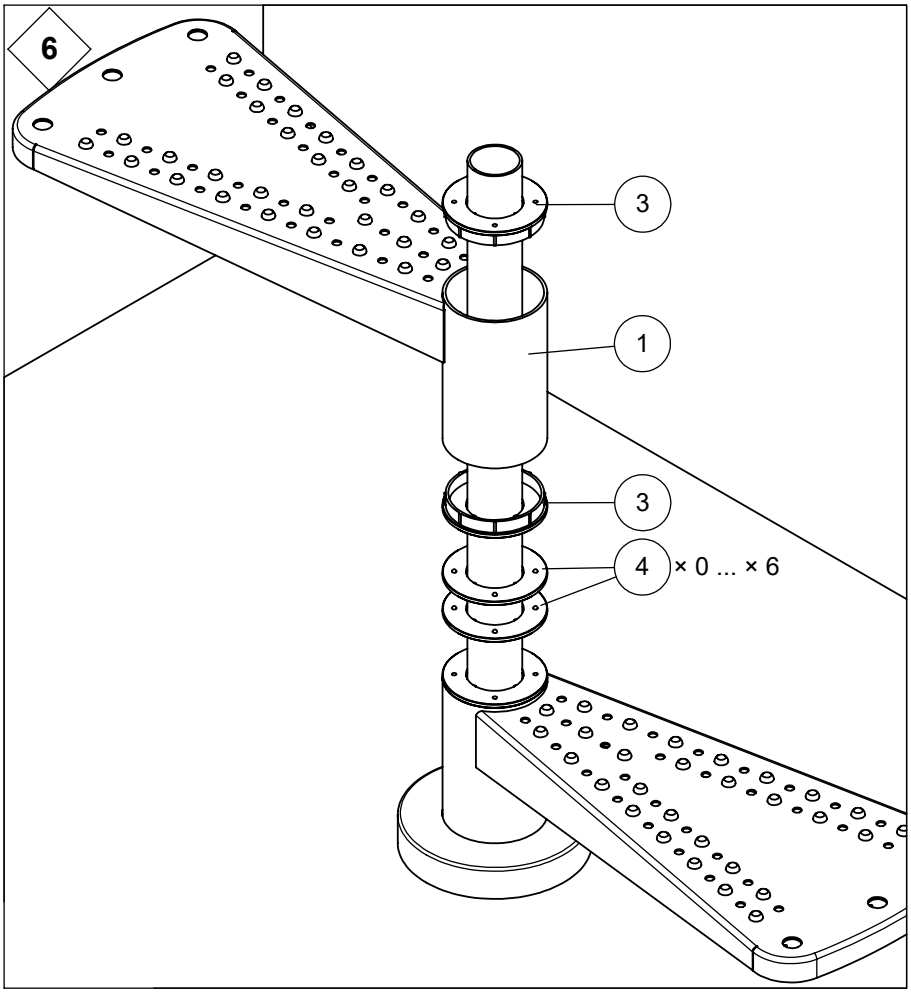
6
3
1
3
4
× 0 ... × 6

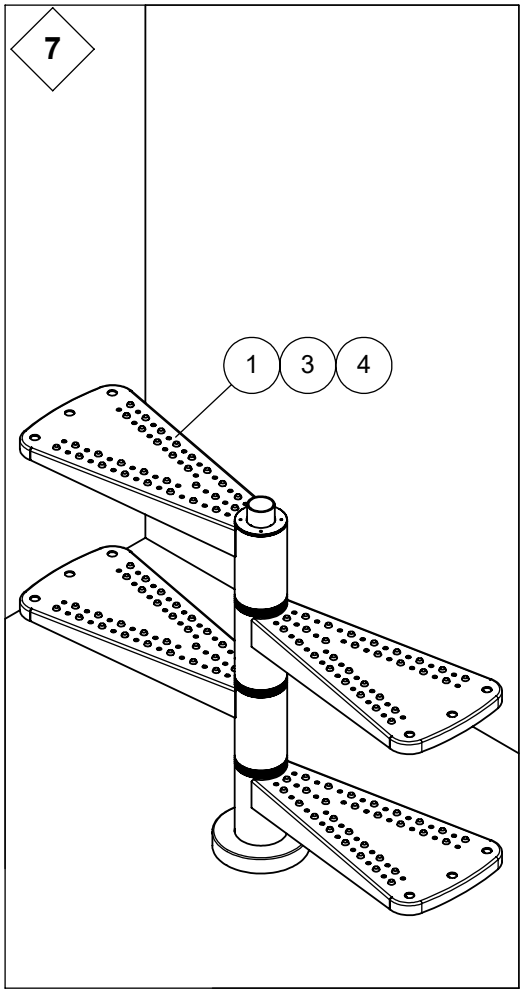
7
1
3
4

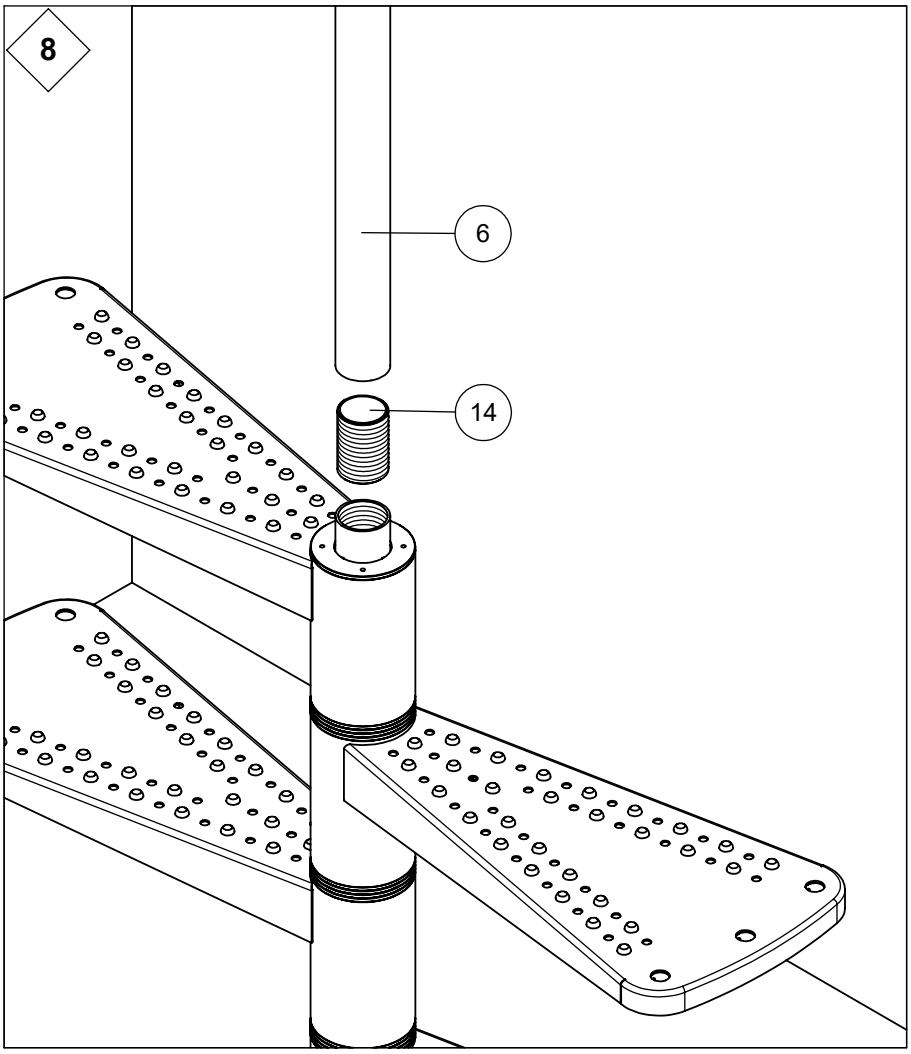
8
6
14

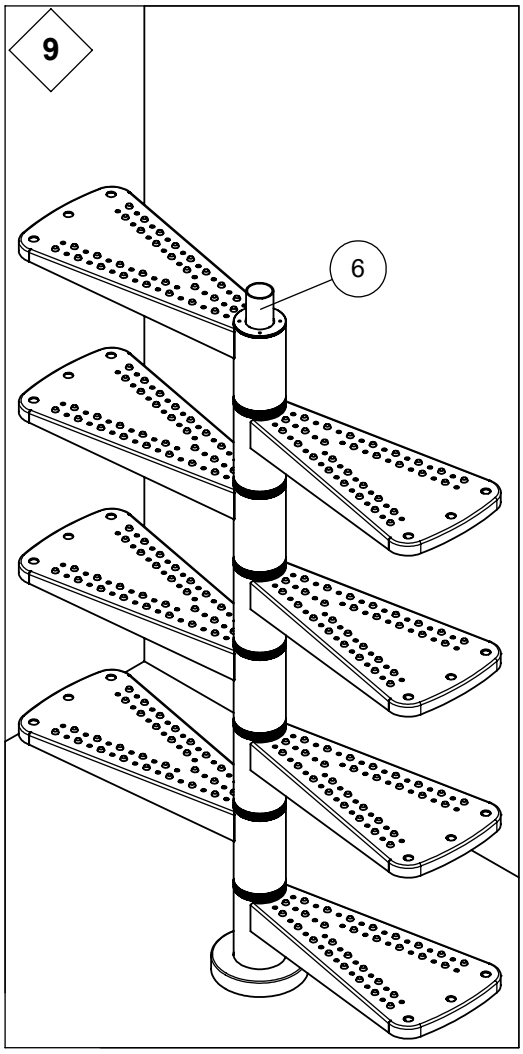
9
6

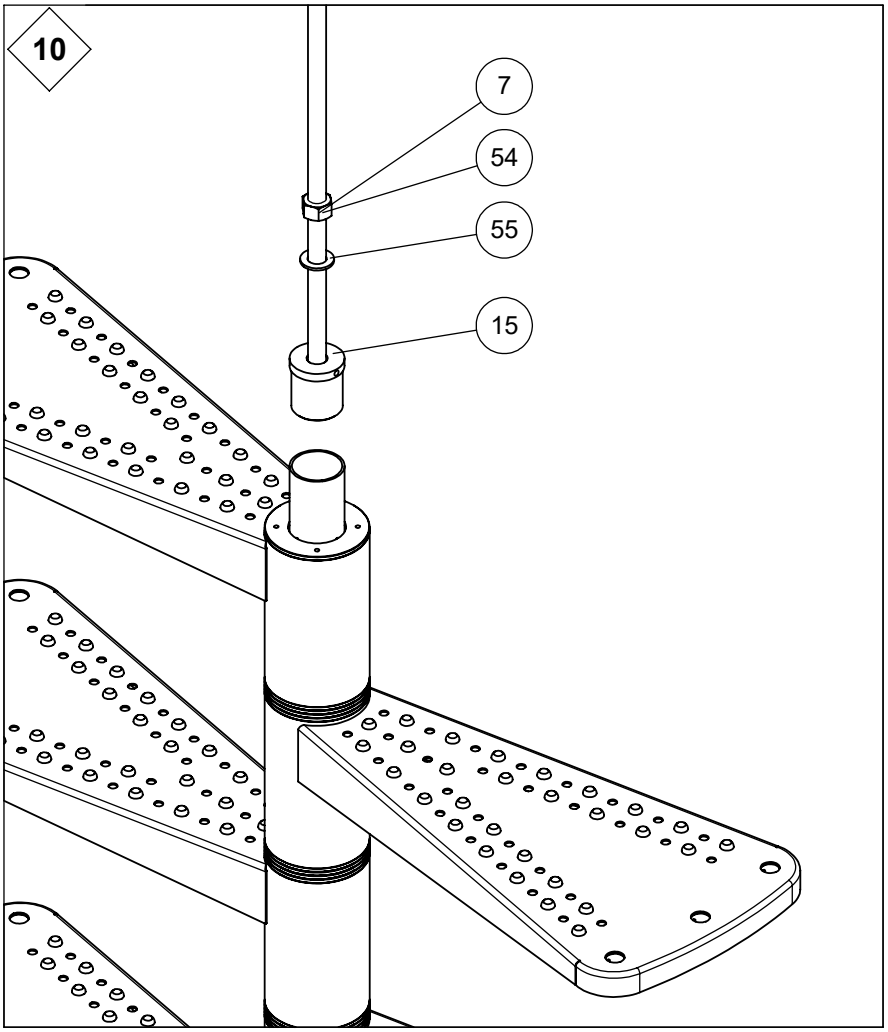
10
7
54
55
15

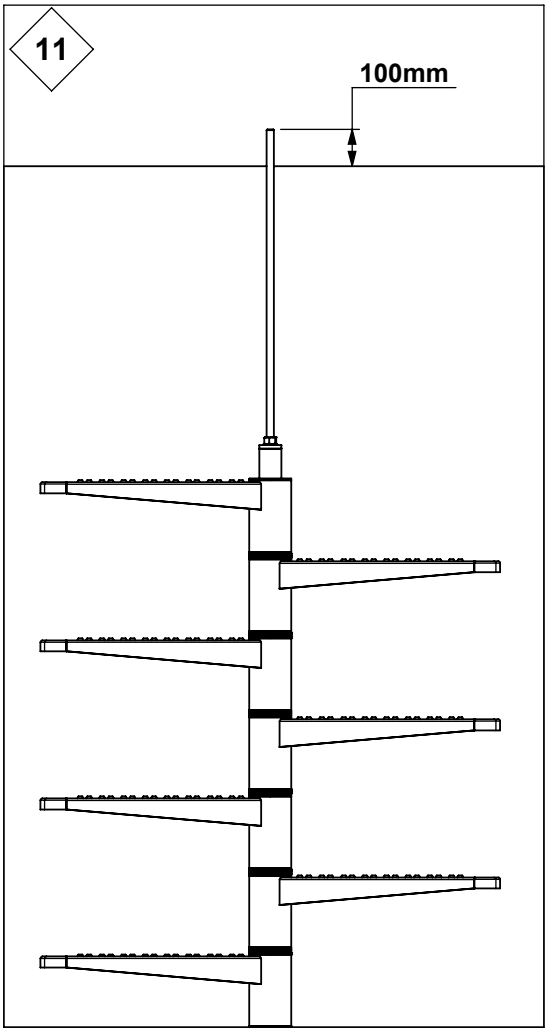
11
100mm

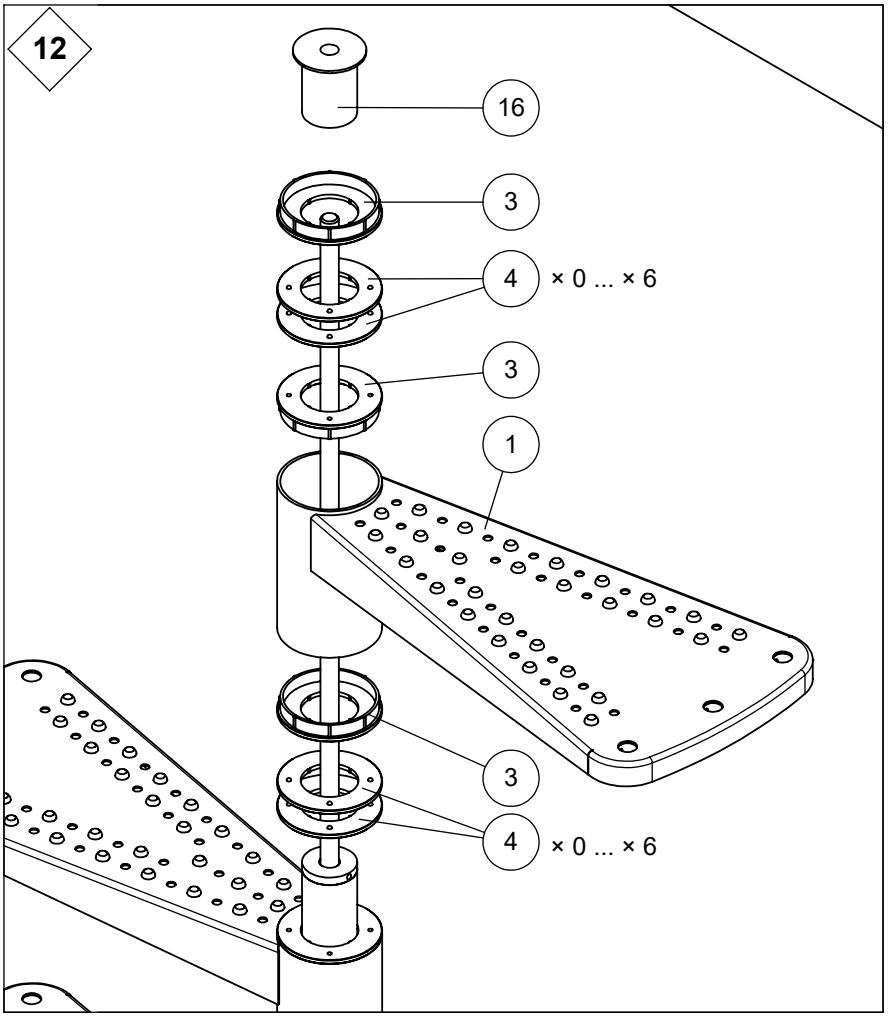
12
16
3
4
× 0 ... × 6
3
1
3
4
× 0 ... × 6

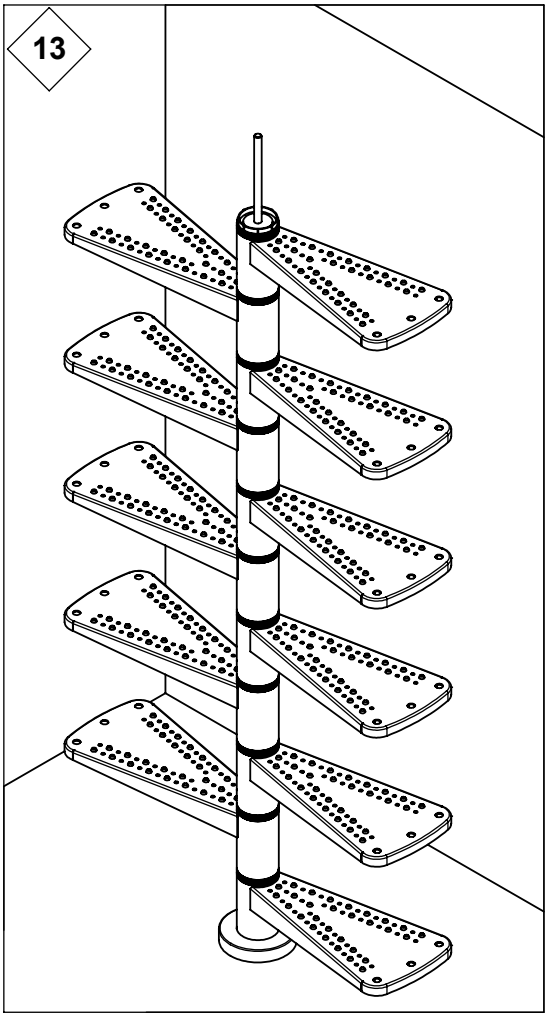
13

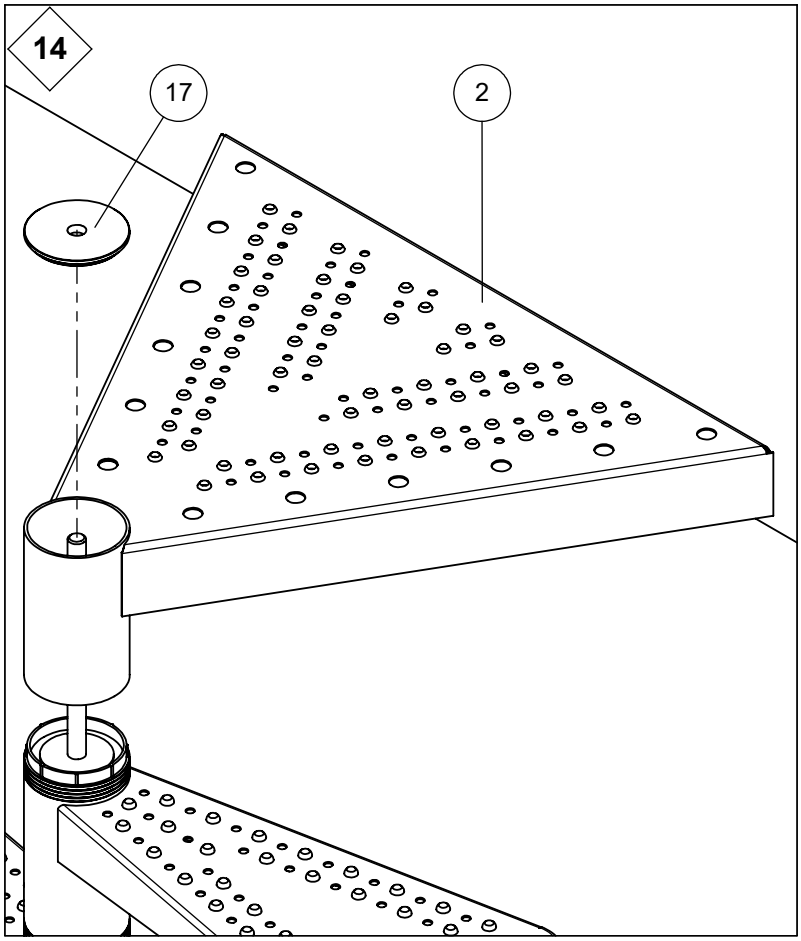
14
17
2

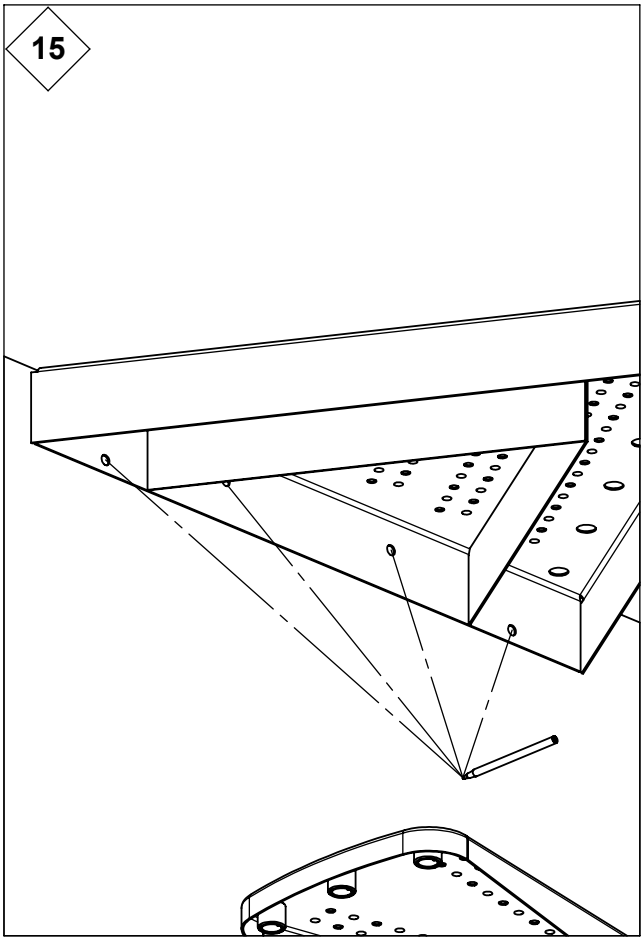
15

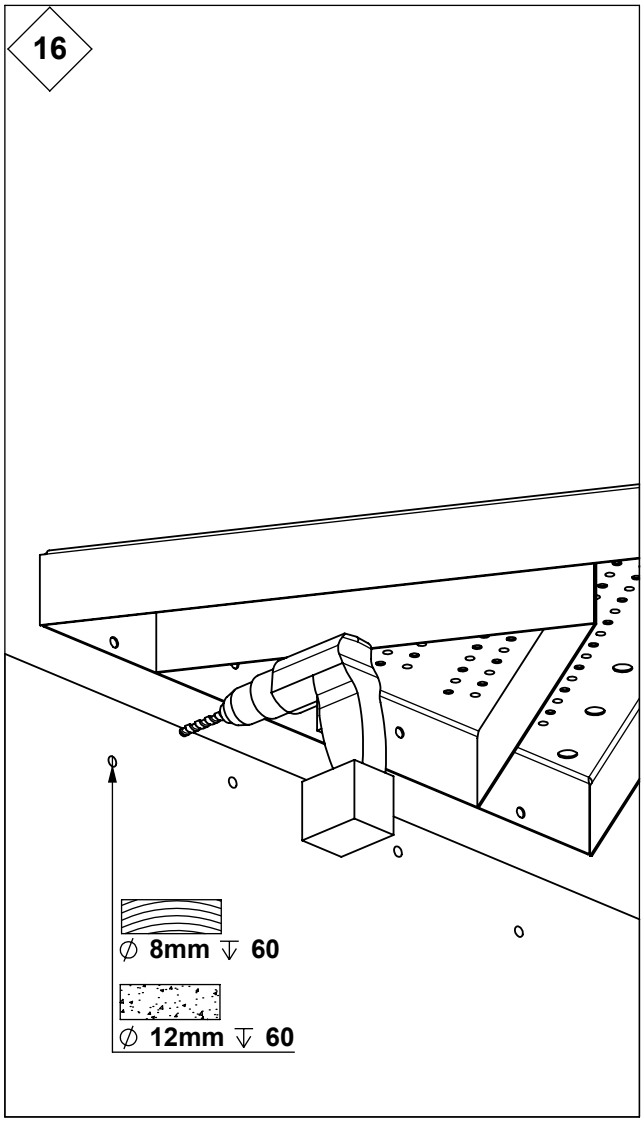
16
∅ 8mm ↓ 60
∅ 12mm ↓ 60

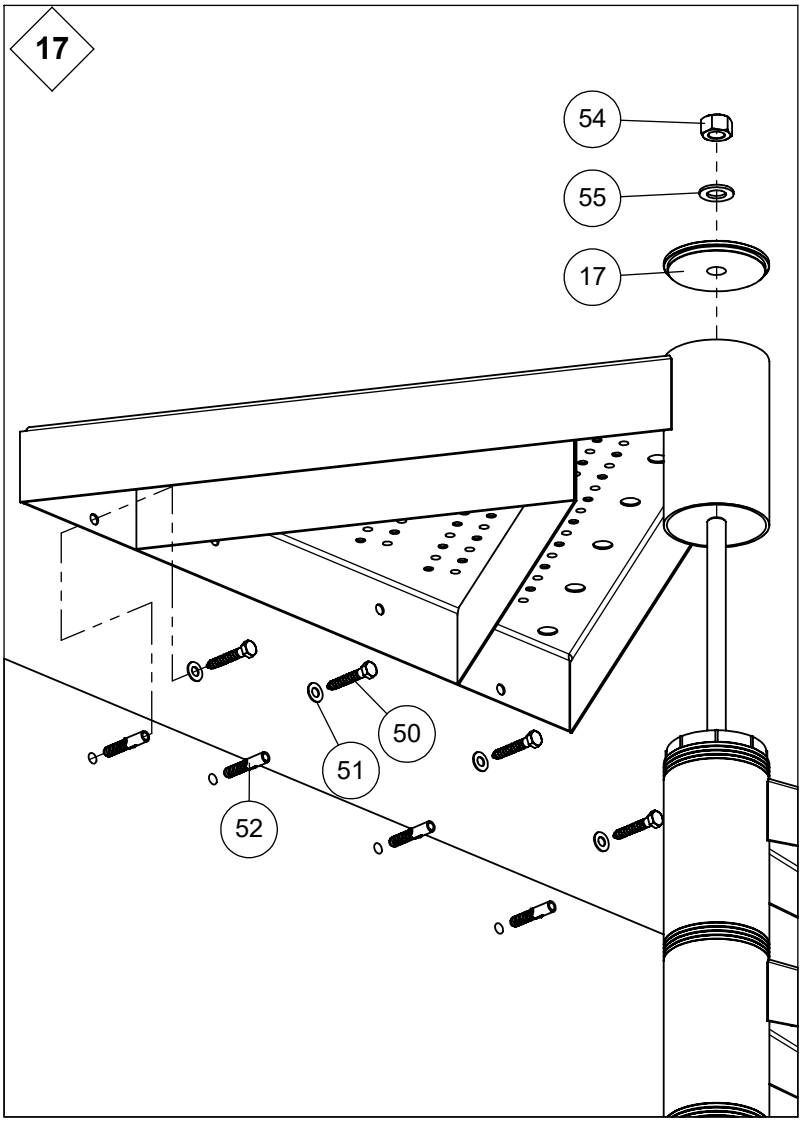
17
54
55
17
50
51
52

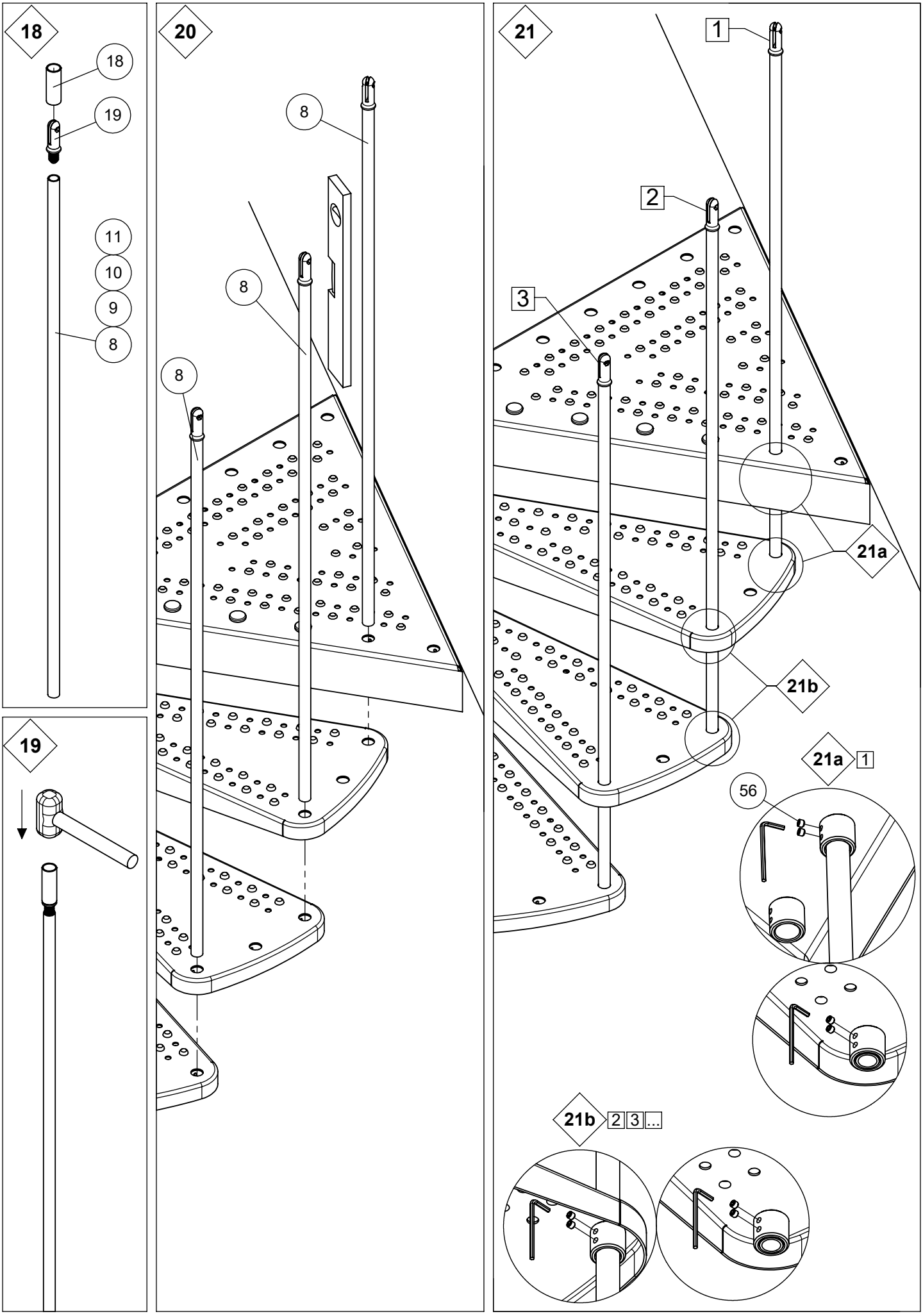
18
18
19
11
10
9
8
19
20
8
8
8
21
1
2
3
21a
21b
21a 1
56
21b 2 3 ...

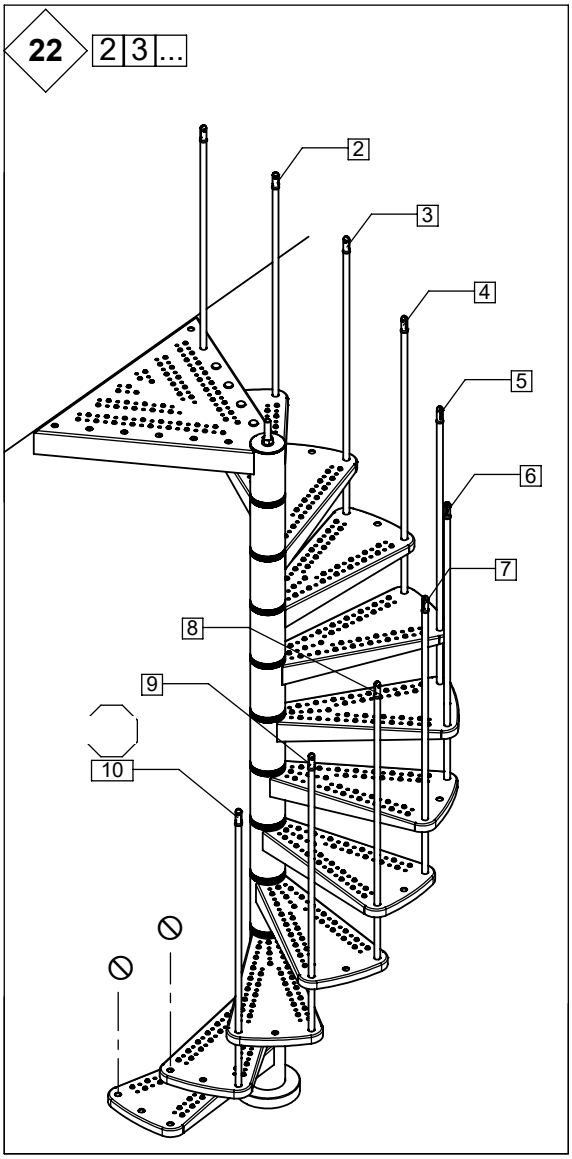
22
2 3 ...
2
3
4
5
6
7
8
9
10

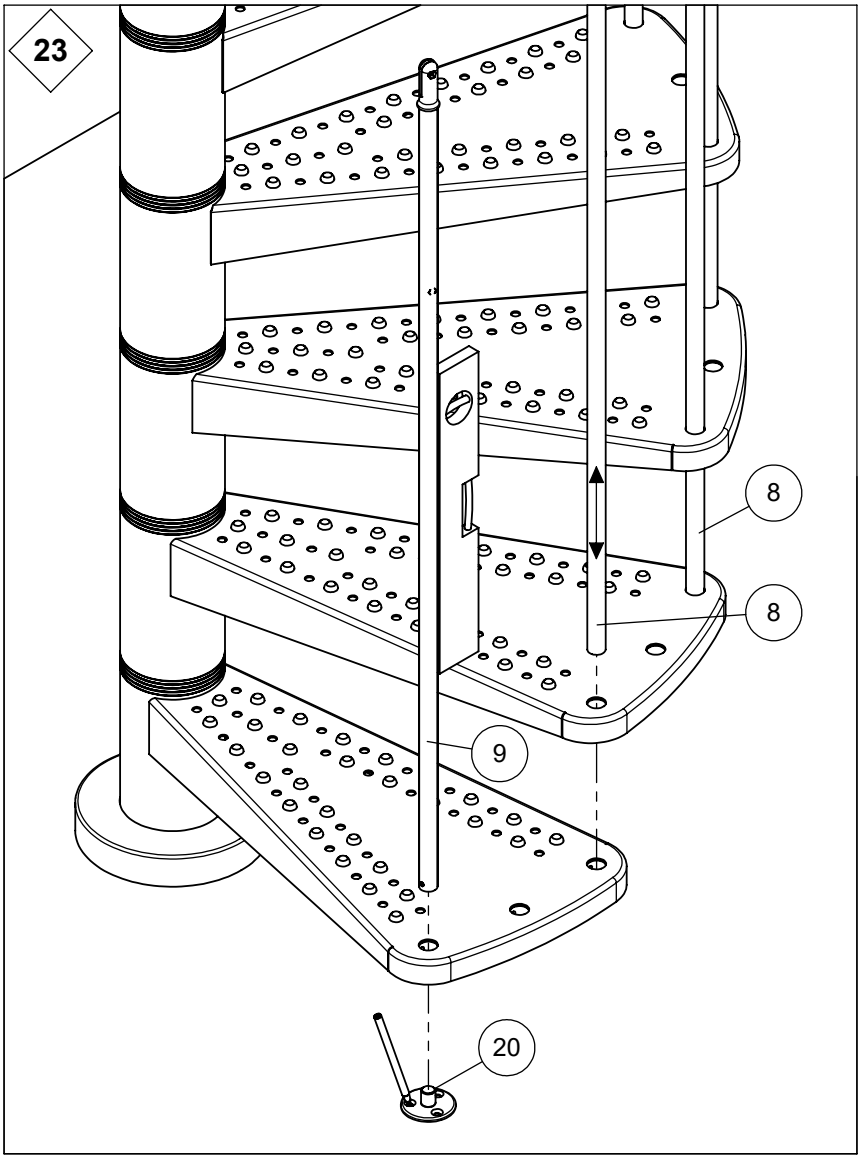
23
8
8
9
20

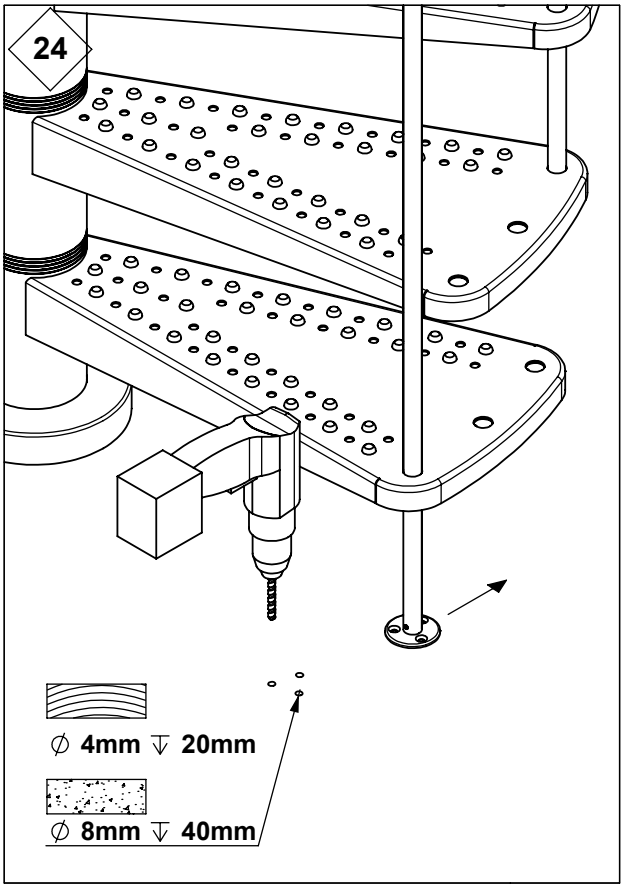
24
∅ 4mm ⊽ 20mm
∅ 8mm ⊽ 40mm

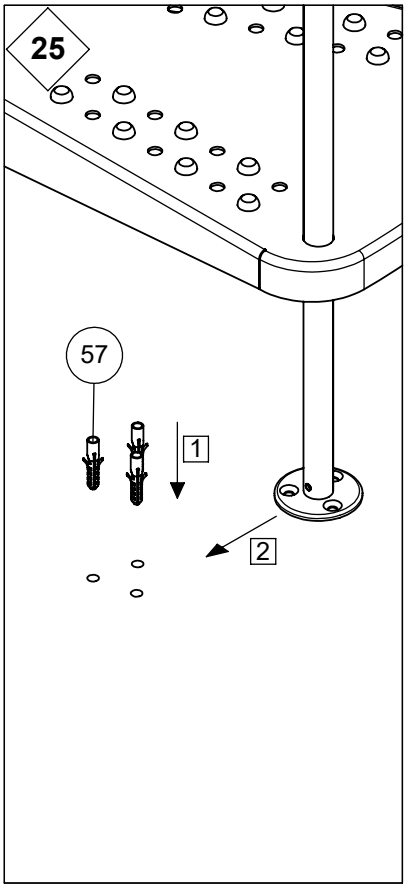
25
57
1
2

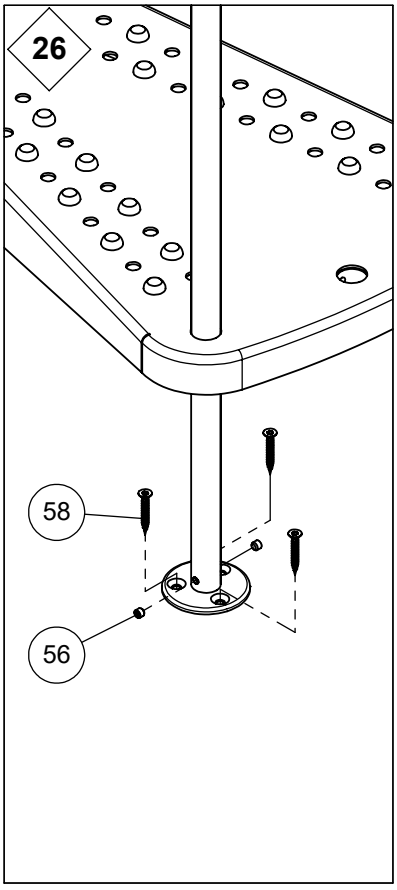
26
58
56

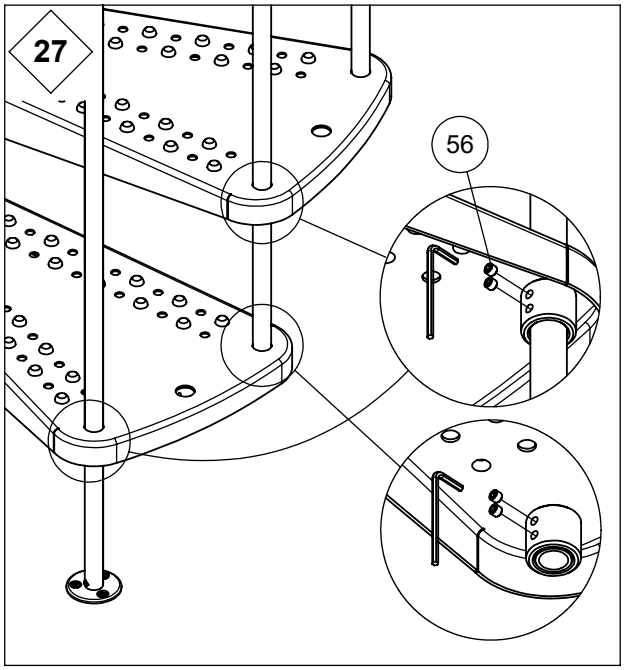
27
56

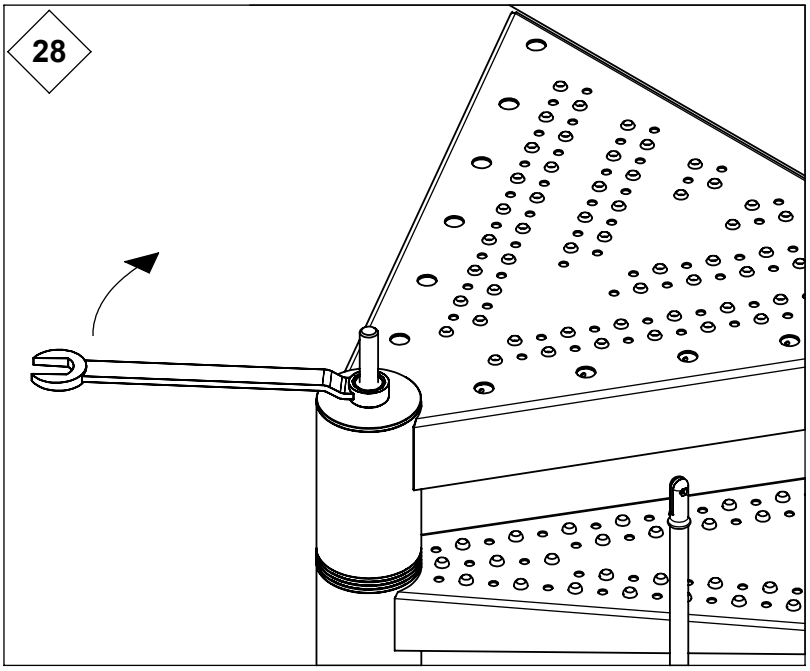
28

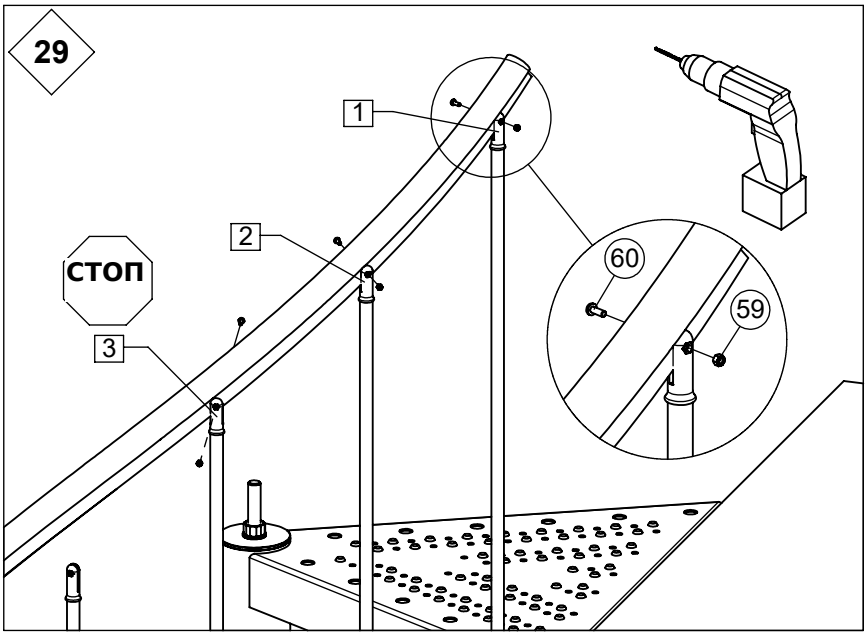
29
1
2
3
СТОП
60
59

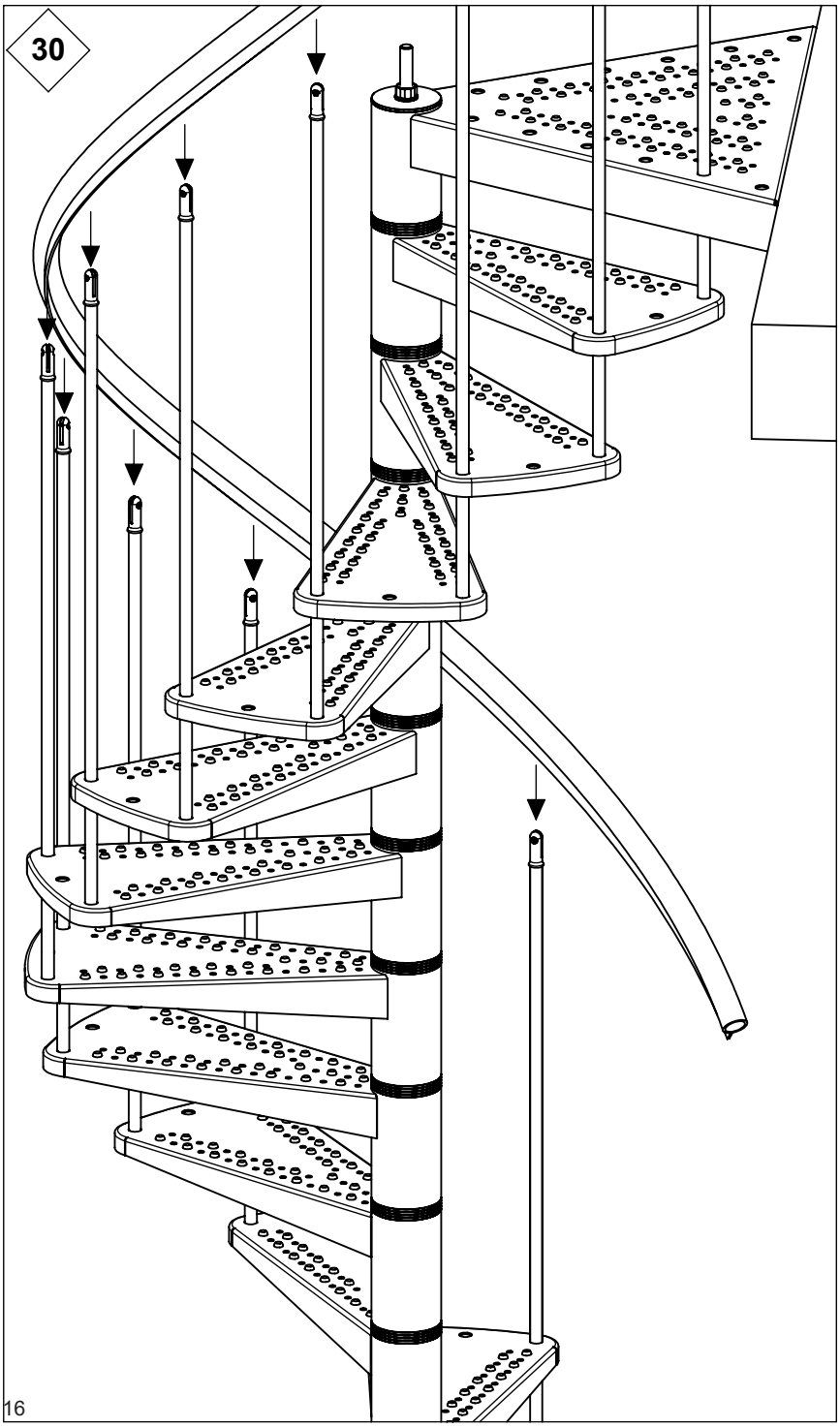
30

31

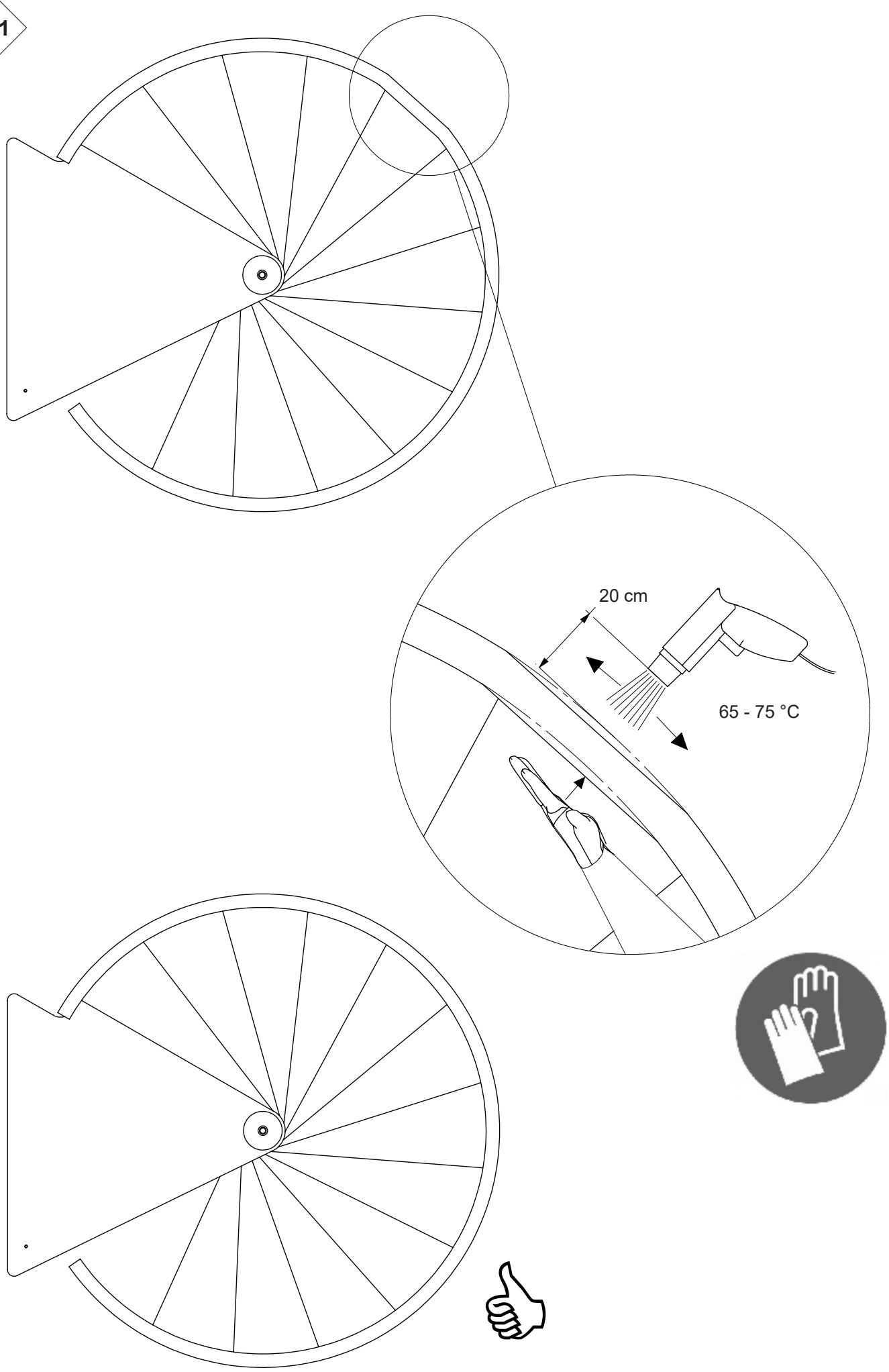

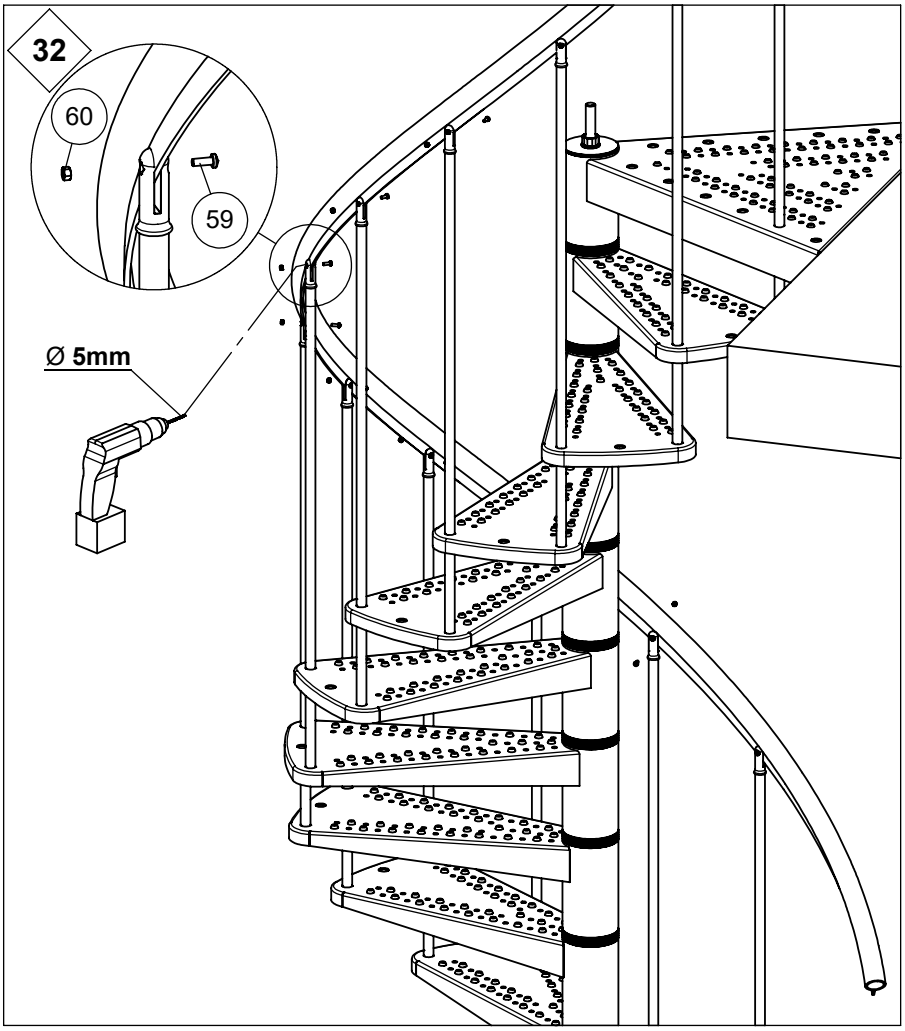
32
60
59
Ø 5mm

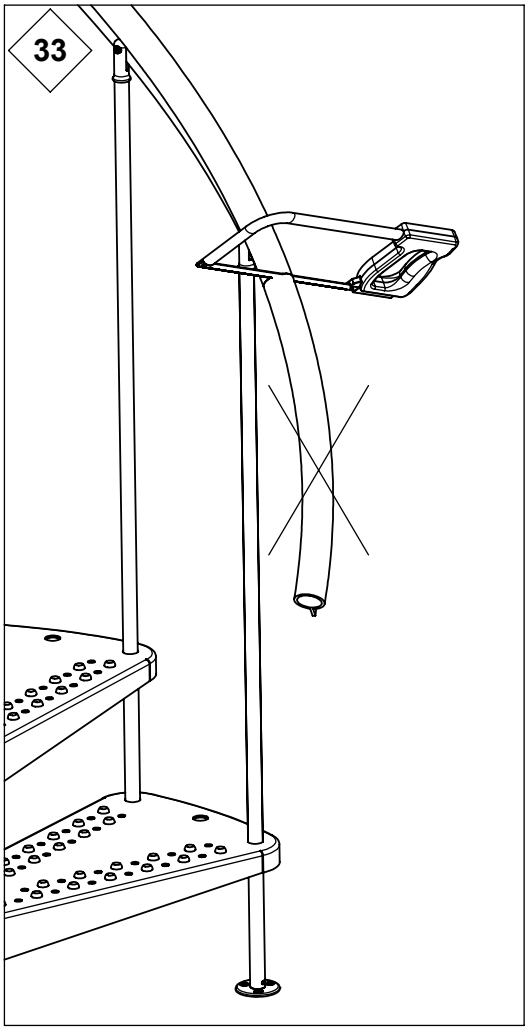
33

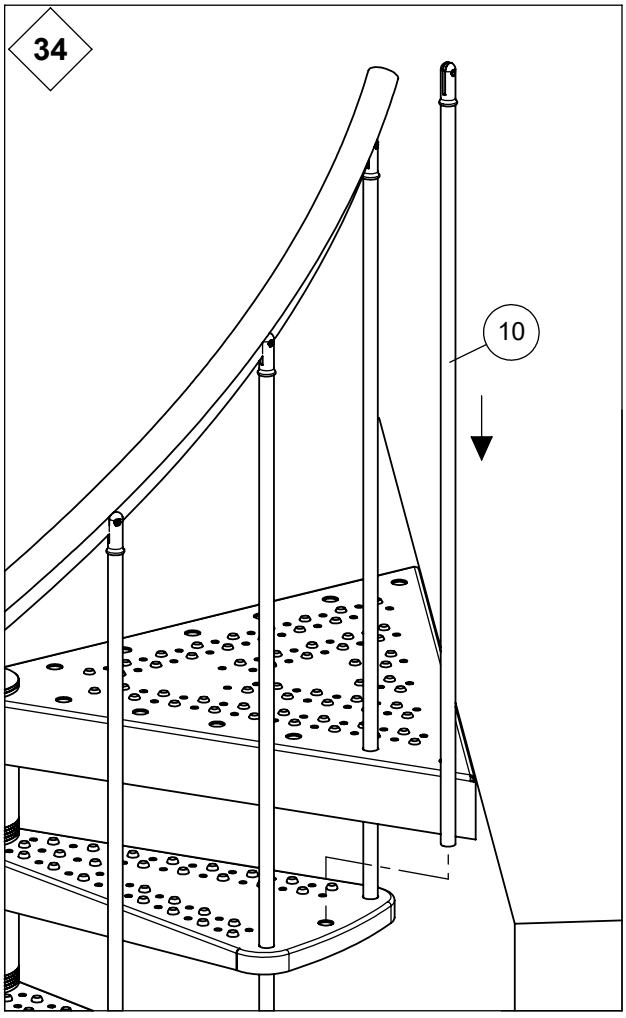
34
10

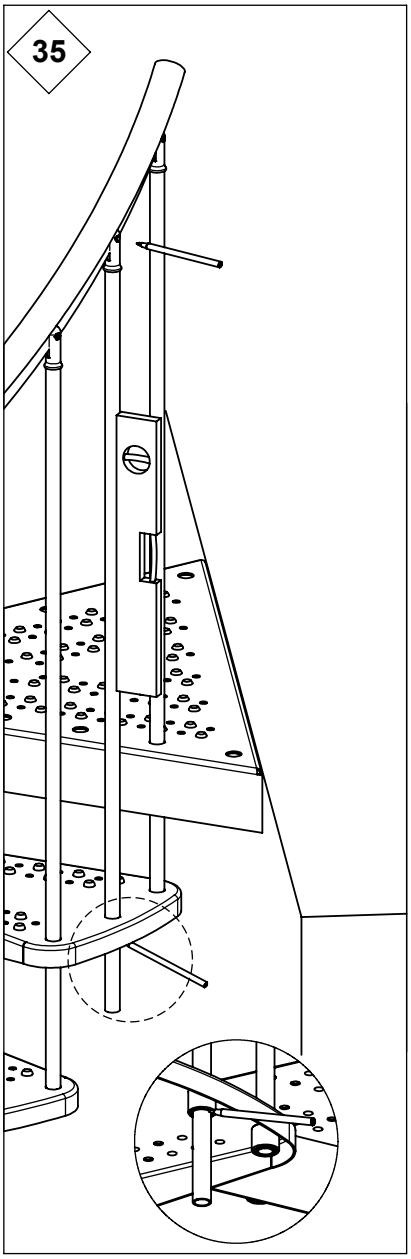
35

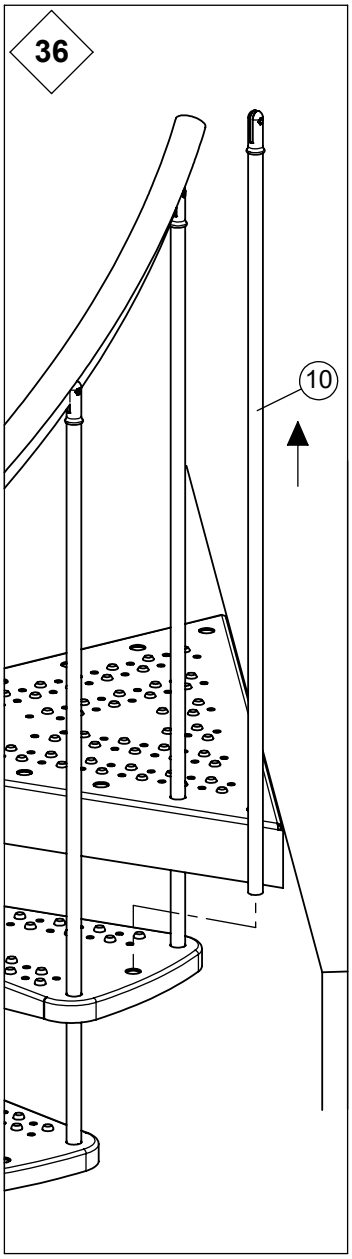
36
10

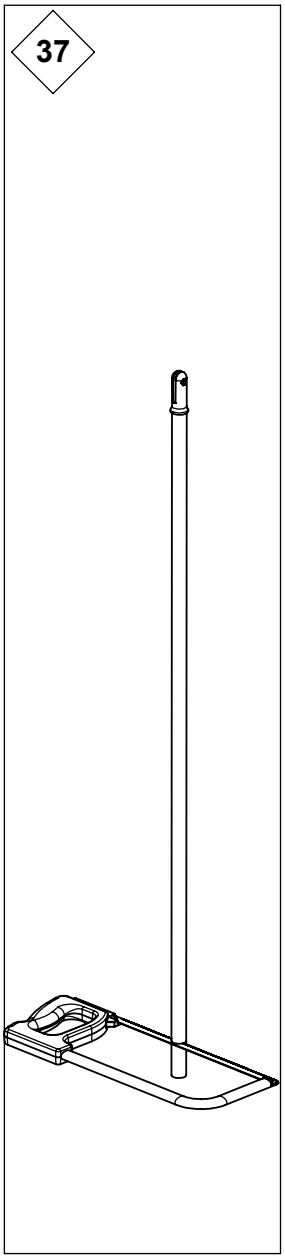
37

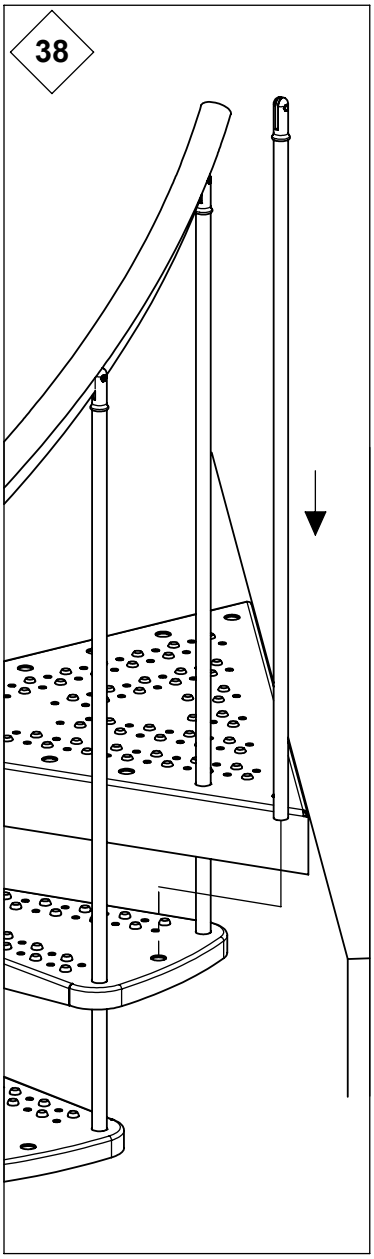
38

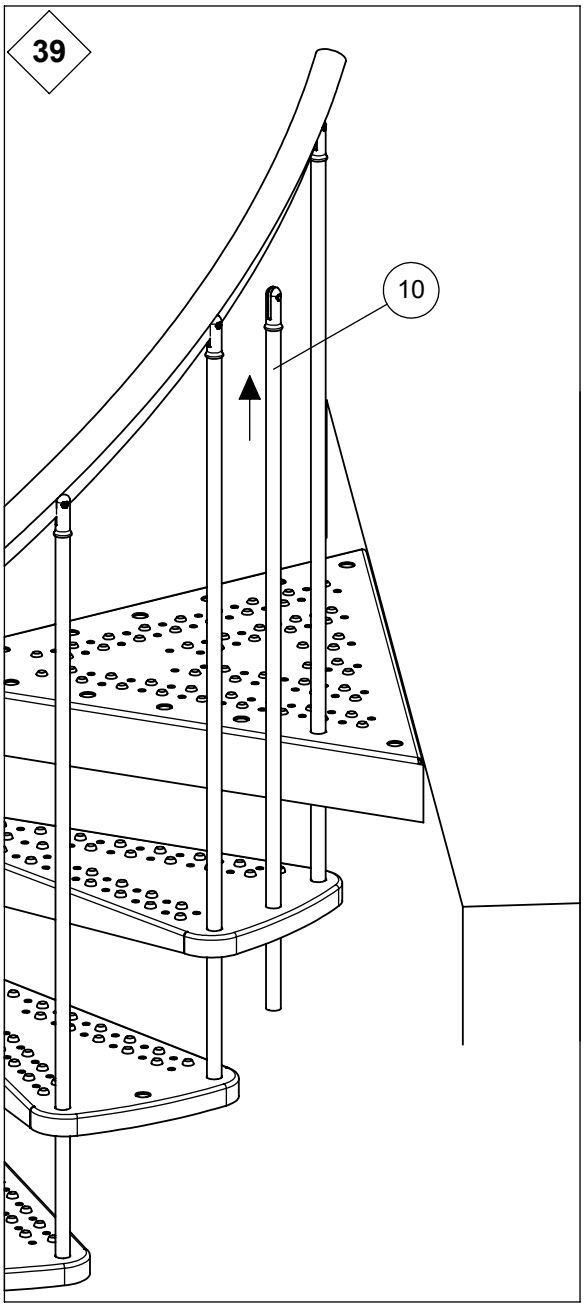
39
10

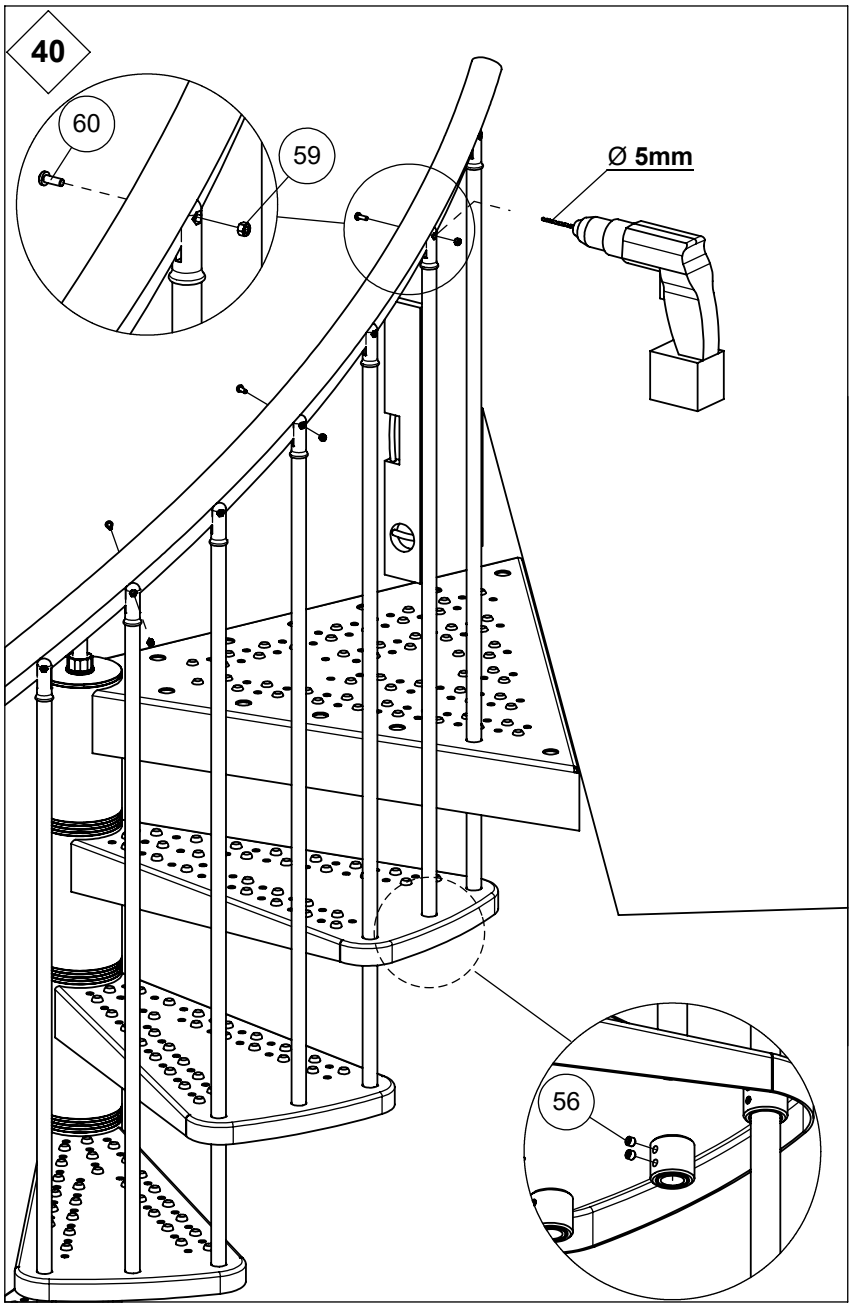
40
60
59
Ø 5mm
56

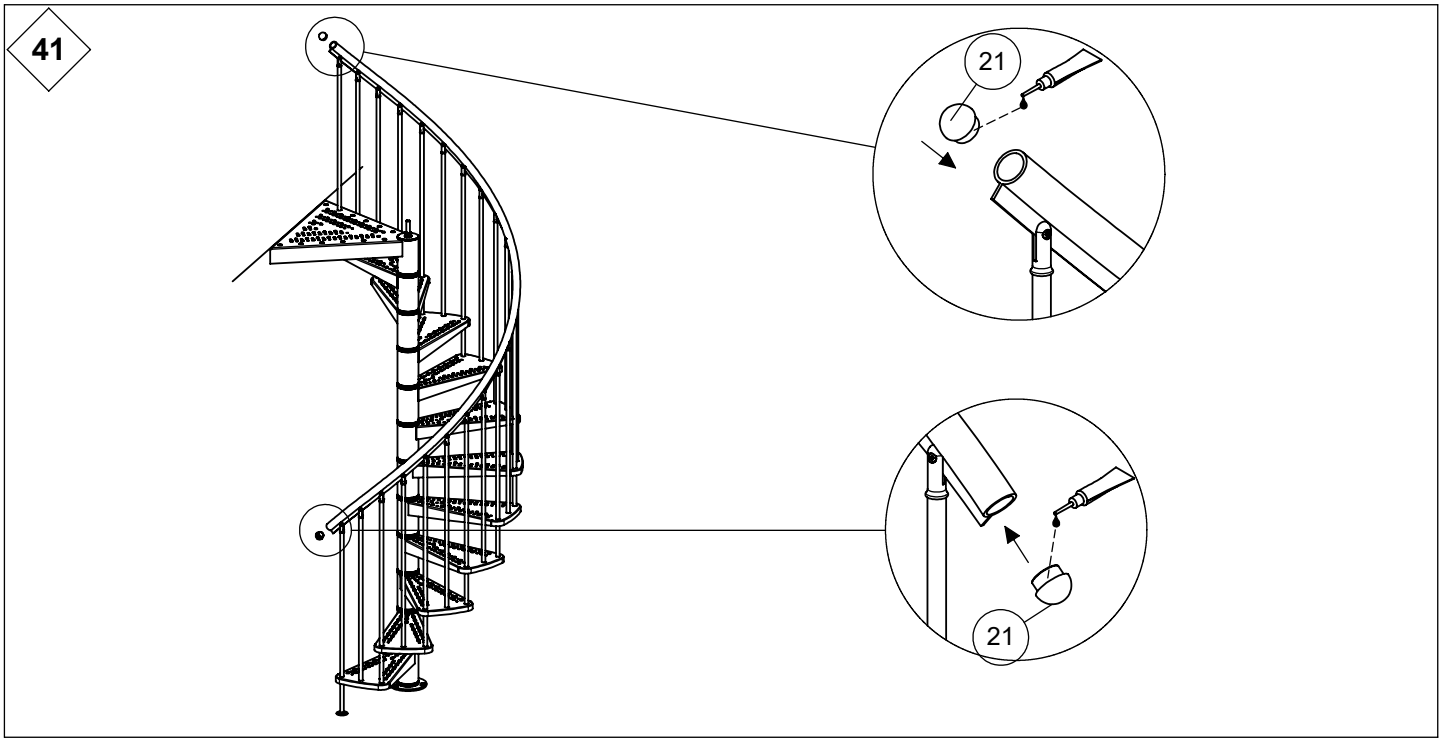
41
21
21

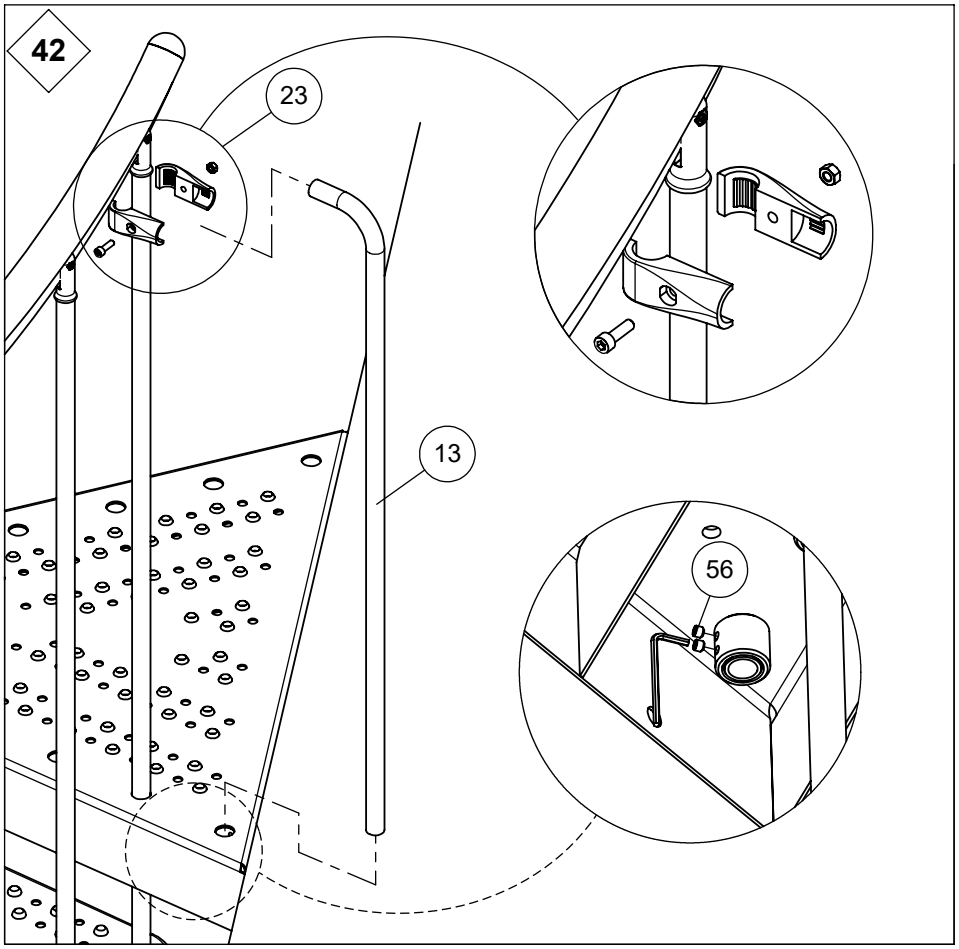
42
23
13
56

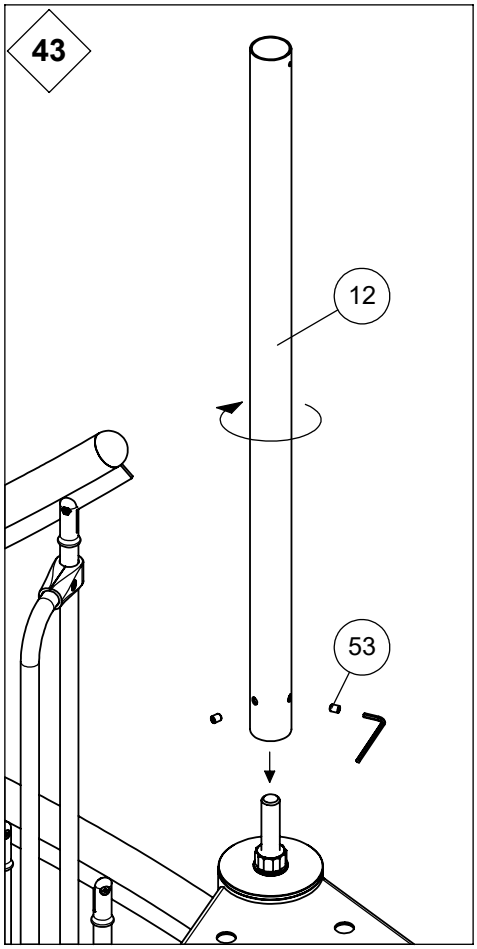
43
12
53

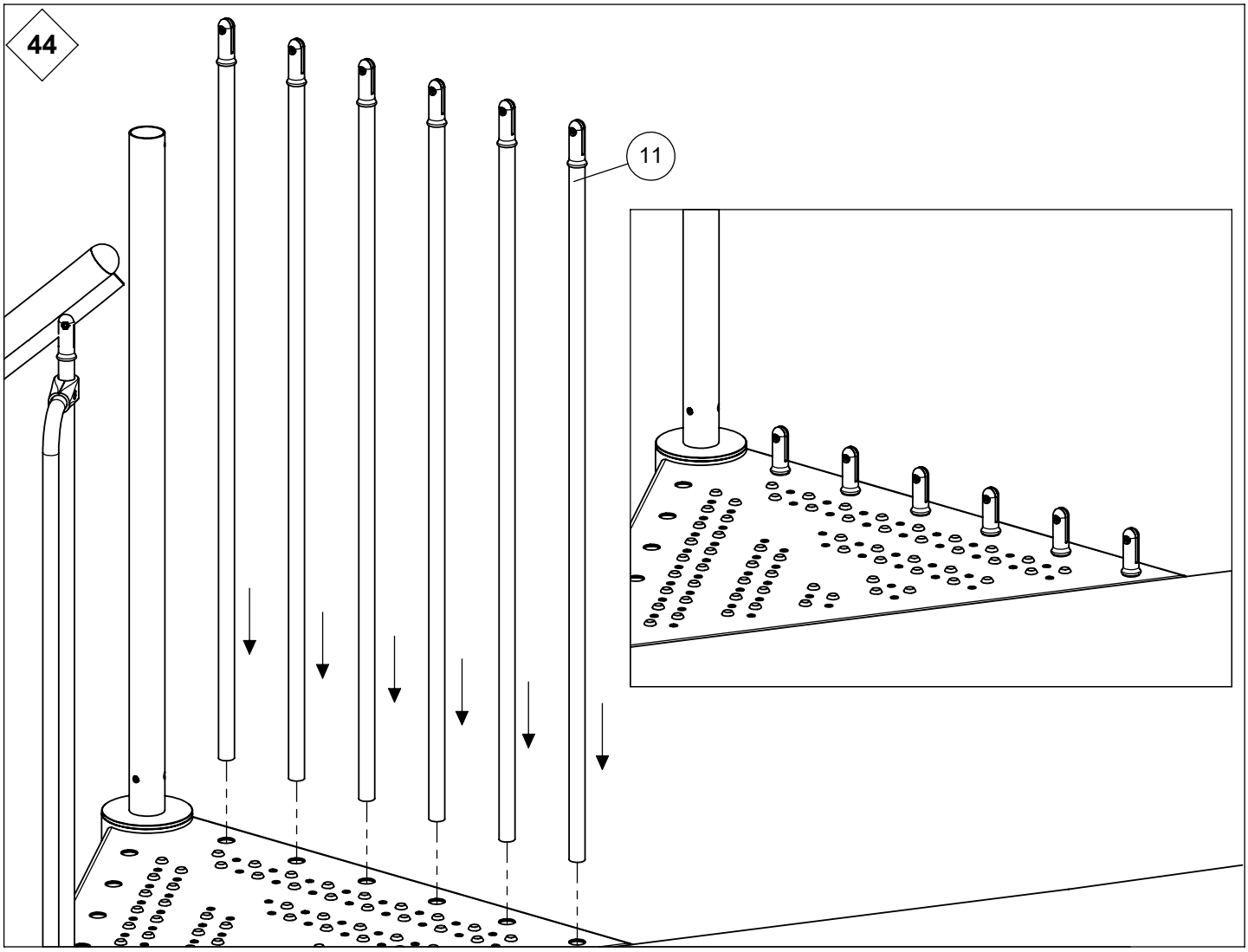
44
11

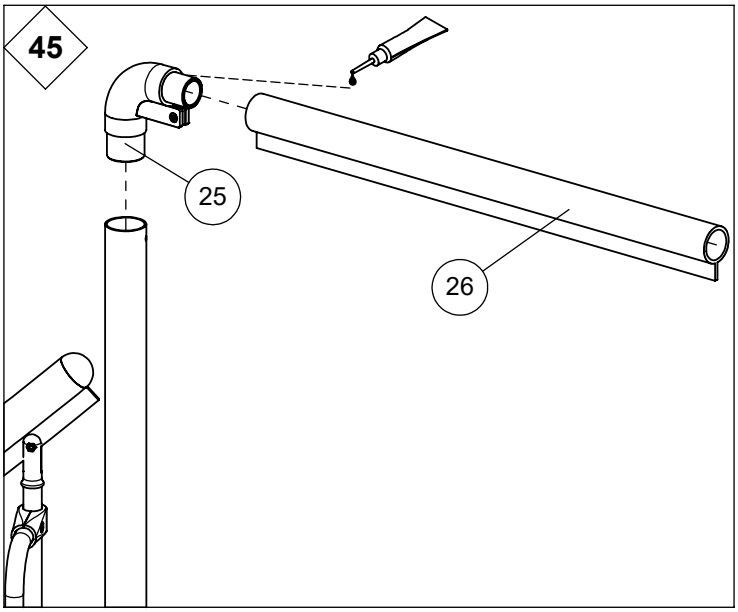
45
25
26

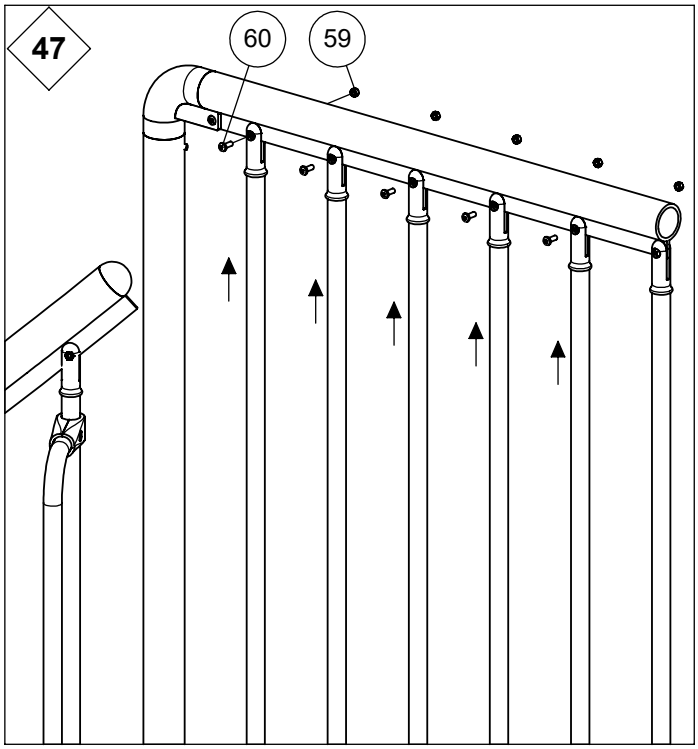
47
60
59

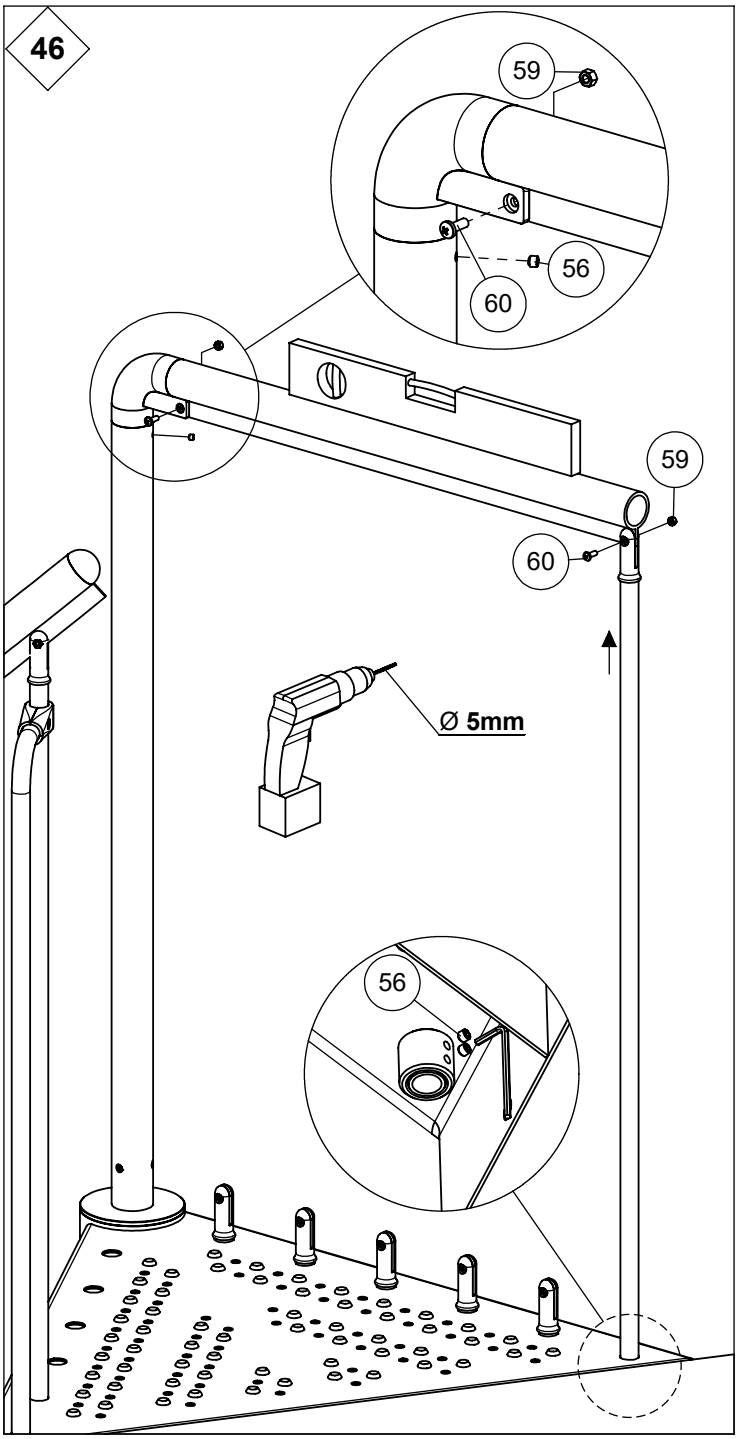
46
59
56
60
59
60
Ø 5mm
56

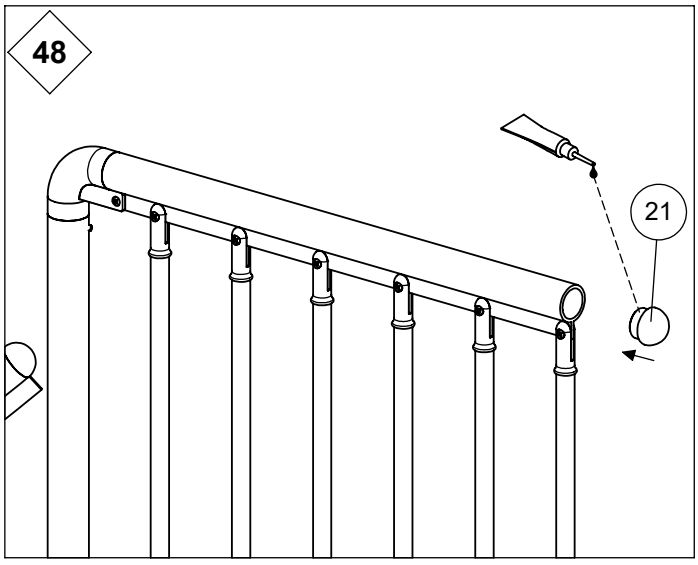
48
21

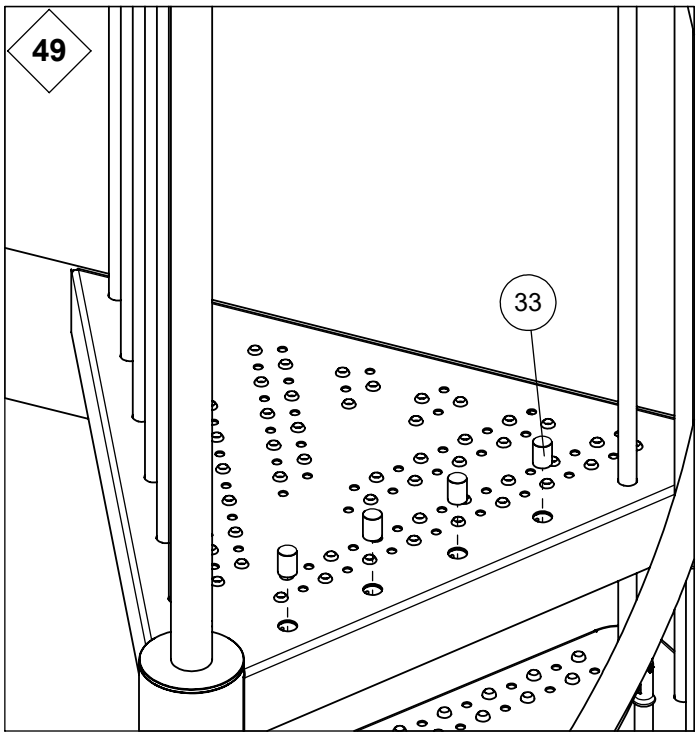
49
33

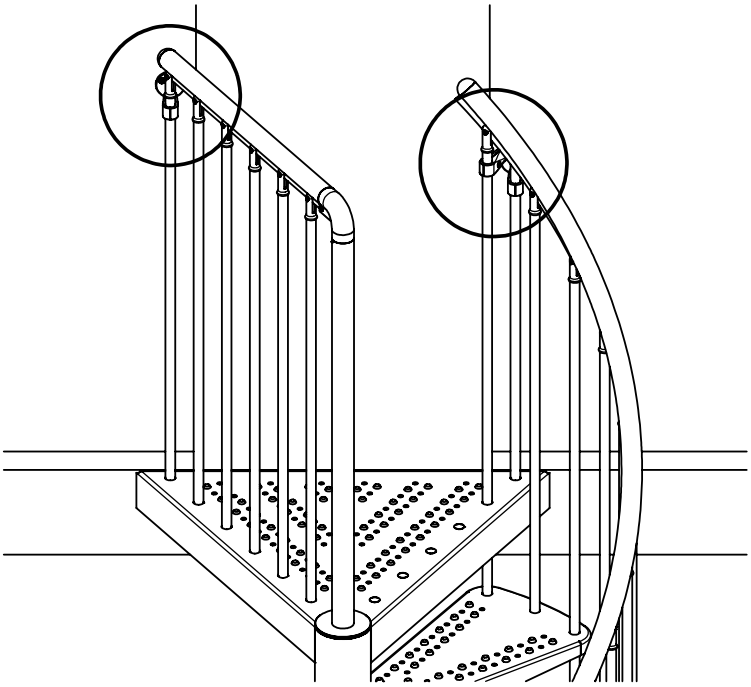

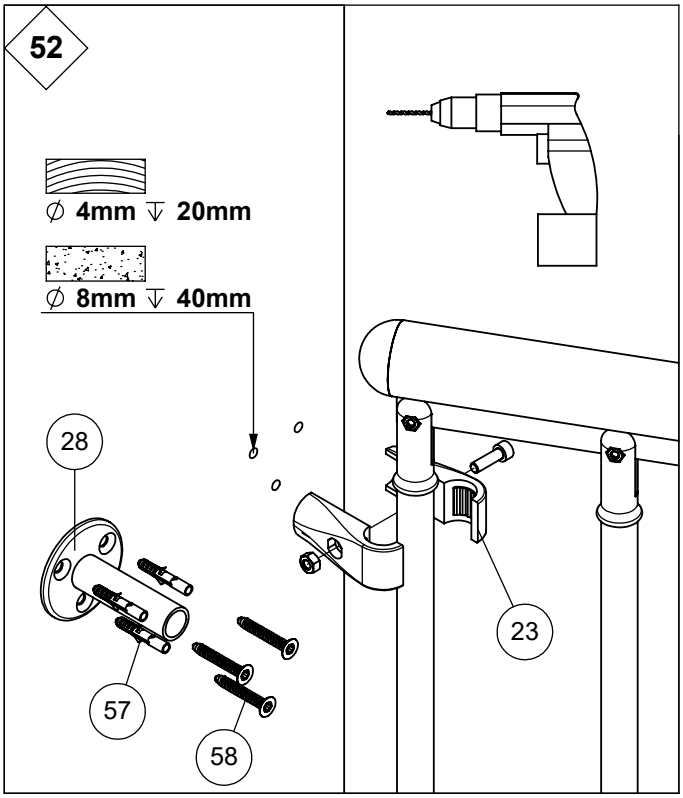
52
∅ 4mm ↓ 20mm
∅ 8mm ↓ 40mm
28
57
58
23

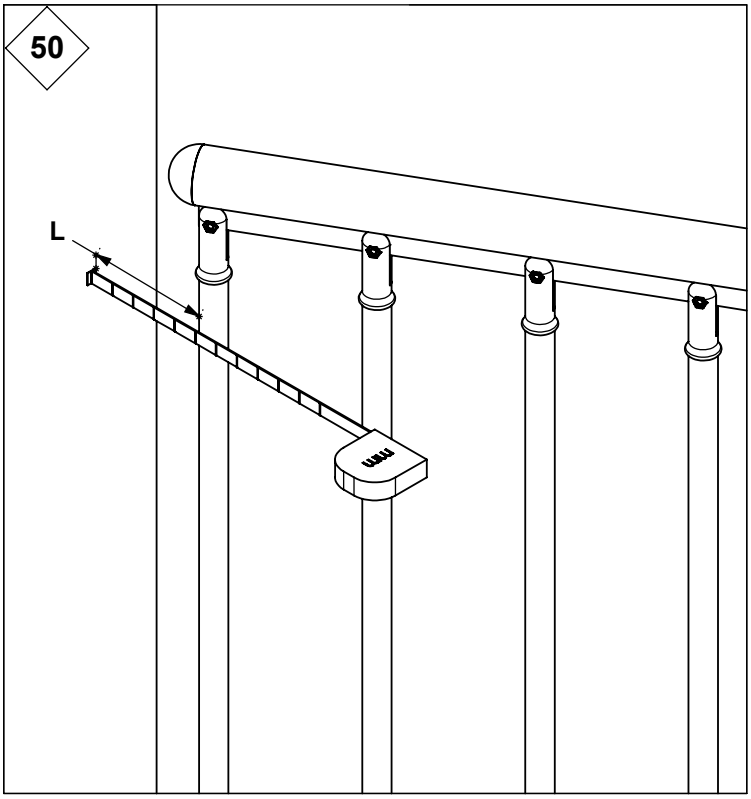
50
L

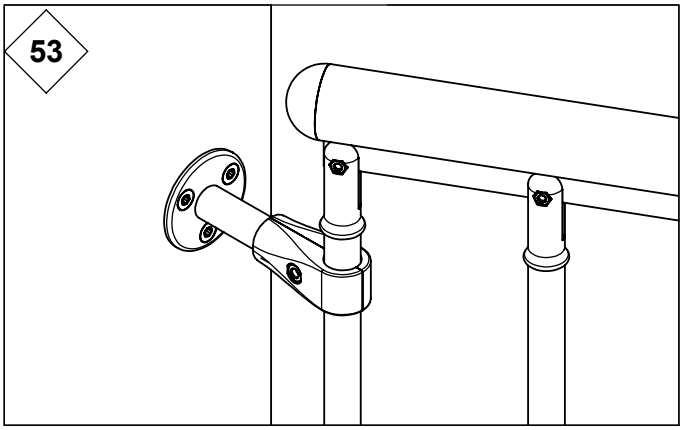
53

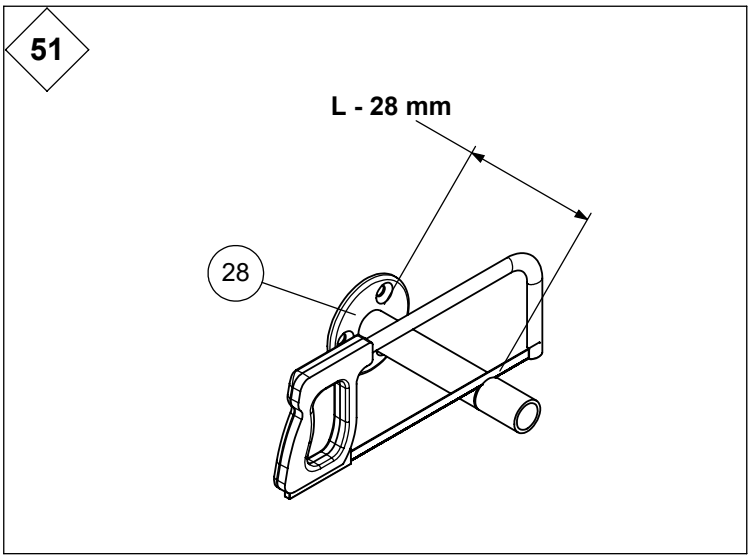
51
L - 28 mm
28

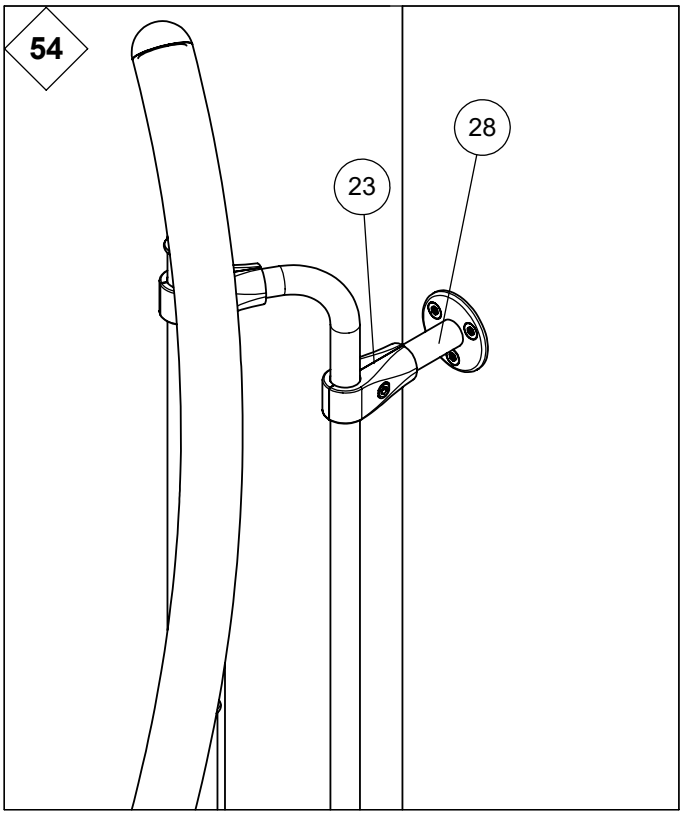
54
28
23